Land Survey Notes:

1. Underground structures, if any exist, are not shown hereon, except as noted.
2. The topography shown hereon is based upon aerial photography dated April 14, 2003. Supplemental topography by Insite Engineering, Surveying and Landscape Architecture, P.C., completed on October 2, 2008. The elevations shown hereon conform to the North American Vertical Datum of 1988 (N.A.V.D., 1988). The contour interval is 2'.
3. Deed Reference:
   Liber 1655, Cp 475; recorded February 5, 2004
   Grantee: Farrington Properties LLC
4. The alteration of survey maps by anyone other than the original preparer is misleading, confusing, and not in the general welfare and benefit of the public. Licensed Land Surveyors shall not alter survey maps, survey plans, or survey plats prepared by others.
5. Unauthorized alteration or addition to this survey is a violation of Section 7209, subdivision 2 of the New York State Education Law.
6. Interior stone walls, planimetric features and offsite structures and improvements shown hereon are located photogrammetrically.

General Notes:

1. Property line shown hereon per map entitled "Survey of Property prepared for P.L.I., LLC, etc." prepared by Insite Engineering, Surveying and Landscape Architecture, P.C. last revised April 25, 2008.
2. All structures and driveways within 200 feet of the site boundaries are shown.
3. The subject property falls within the Brewster School District and the Brewster–Southeast Joint Fire District.
4. The subject property does not contain NYSDEC wetlands based on the New York State Freshwater Wetlands Map.
5. The Town–regulated wetlands were flagged by Steve Marino of Tim Miller Associates (TMA), Inc. on May 10, 2005, September 30, 2005 and October 18, 2005 by Chris Robbins of TMA on November 12, 2007, and by Brian Bury of TMA on August 18, 2008. The wetland flags were survey located by Insite Engineering, Surveying and Landscape Architecture P.C. on June 14, 2005, November 13, 2007 and October 2, 2008.
6. The on–site watercourses were delineated by Matthew Giannetta of the NYCDEP on June 6, 2006 and the watercourses were survey located on November 2, 2006 by Insite Engineering, Surveying & Landscape Architecture, P.C.
7. There are no floodways or special flood hazard areas on this property in accordance with the official Flood Insurance Rate Map and Flood Boundary and Floodway Map.
8. All proposed utilities shall be installed underground.
9. It shall be the Contractor's responsibility to identify and protect all underground utilities. The contractor shall contact Dig Safely New York at 811 and any other required utility locators prior to the start of construction.
10. There are no existing wells within 200 feet of the proposed SSTS's, and no existing SSTS's within 200 feet of proposed wells, unless otherwise shown.

Town Notes:

1. **All proposed driveways must be paved from the edge of the street pavement back to the right–of–way line or to the high point of the driveway, whichever is the greater distance.**
2. **No footing, foundation, basement, yard, area or curtain drains of any kind shall discharge upgradient of or into a Town street or a street proposed to be dedicated to the Town at a future date. Any such drains located upgradient of an existing or future Town street shall be connected into the storm drainage system in the street, unless otherwise permitted by the Superintendent of Highways. The location and connection of any such drain into the storm drainage system in the street shall be approved and inspected by the Superintendent of Highways.**
3. **The subdivider has irrevocably offered to cede title to the Town of Southeast of the land areas designated for streets, street widening and parks and any other lands noted on this plat for dedication to the Town, including, without limitation, all lights, light poles, storm and sanitary sewers, signs, water mains, fire hydrants, retention and detention basins and any other improvements thereon. Approval of this final plat does not constitute acceptance by the Town of the offer of dedication.**
4. **The improvements shown on this plat shall be substantially completed on or before the _______ day of _________________, 20____, and shall be fully completed on or before the _______ day of _________________, 20____.**

SOILS LEGEND

SOILS	DESCRIPTION	HYDROLOGICAL GROUP
(line)	Soils Boundary	–
CsD	Chatfield–Charlton complex, hilly, very rocky	B
Fr	Fredon Silt loam	C
KnB	Knickerbocker fine sandy loam, 2% to 8% slopes	A
KnC	Knickerbocker fine sandy loam, 2% to 8% slopes	A
LcB	Leicester loam, 3% to 8% slopes, stony	C
PnB	Paxton fine sandy loam, 2% to 8% slopes	C
PnC	Paxton fine sandy loam, 8% to 15% slopes	C
RdB	Ridgebury loam, 2% to 8% slopes, very stony	C
Sh	Sun loam	D

LEGEND

- Property Line
- Proposed Property Line
- Property Line to be Extinguished
- Existing 2' Contour
- Existing 10' Contour
- Existing Stone Wall
- Existing Guide Rail
- Existing Drainage Pipe
- Existing Drain Inlet
- Existing Stream (Photogrammetric)
- Existing Town Wetland Limit Line with Flag Location
- Wetland Symbol
- Wetland Control Line
- Proposed Curb
- Existing Fence

AREA TABLE

Lot No.	Proposed Area s.f.	Proposed Area Acres
1	173,205	4.0
2	482,394	11.3
3	1,249,556	28.7
Total Parcel Area	1,915,158	44.0

VERIFICATION OF E–911 NUMBERING

I, A. Gerald Schramek, E911 Coordinator for the Town of Southeast, do hereby certify that the E–911 numbers listed below, and recorded on the Final Plat are approved by this office.

Lot/Building	E–911 Number
Lot 1	
Lot 2	
Lot 3	

A. Gerald Schramek, E911 Coordinator — Date
Town of Southeast

SR–6 Zone Requirements:

	Required/Permitted:	Lot 1:	Lot 2:	Lot 3:
Min. Lot Area:	30,000 sf	173,205 sf ±	492,394 sf ±	1,249,556 sf ±
Min. Lot Frontage:	25'	413' ±	957' ±	1,857' ±
Min. Lot Width:	50'	422' ±	954' ±	1,852' ±
Min. Lot Depth:	50'	413' ±	530' ±	722' ±

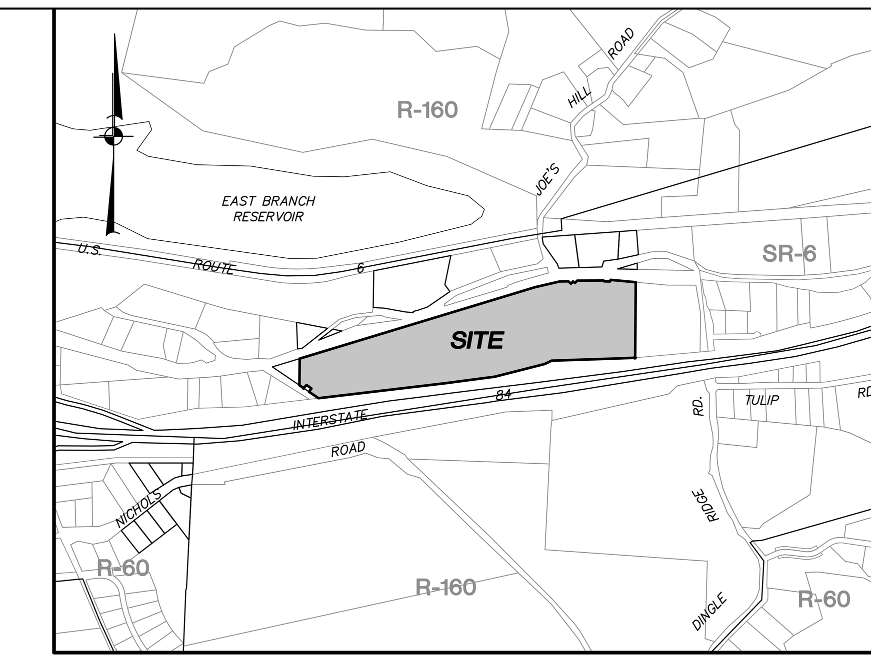

Location Map: Scale: 1" = 1000'

Site Data:
Tax Map No.: 68.–2–48.1 & 68.–2–48.2
Zone: GC–2
Total Acreage: 43.9660± acres
Proposed Use: Large Retail/Commercial

Owner/Applicant:
P.L.I. LLC
1699 Route 6, Suite 1
Carmel, NY 10512

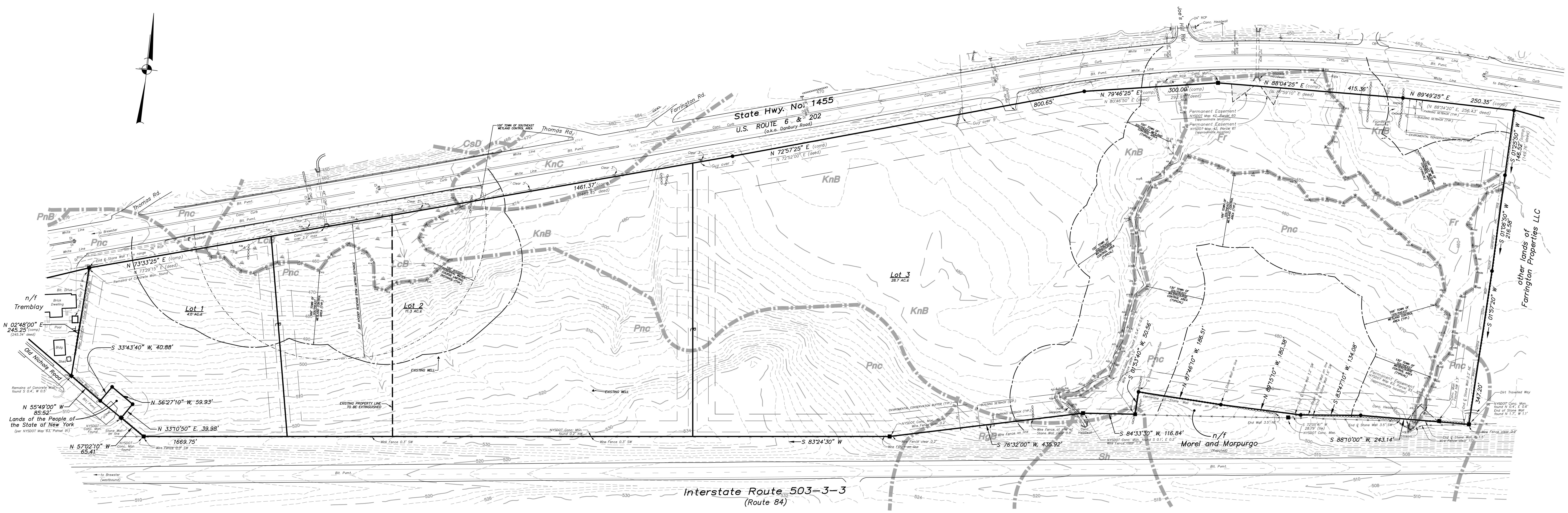

GRAPHIC SCALE
(IN FEET)
1 inch = 80 ft.

Putnam County Department of Health Approval "Non–Jurisdictional" Approval Statement

This is to certify that the division of land as represented on this map does not fall within the definition of subdivision as specified in Section 1115 of the Public Health Law, and Section 1117 of the Public Health Law, and therefore, is not applicable. This map in no way explicit or implied, conveys the approval of the Putnam County Department of Health. Approval of this plat is not required, but all other provisions of the Putnam County Sanitary Code apply.

By: ______________________ Date: ______________
Environmental Health Services

Expiration Date ______________________________

Town of Southeast Planning Board Approval

Approved by resolution of the Planning Board of the Town of Southeast, Putnam County, New York, on the ______ day of ______________ , ________ subject to all requirements and conditions of said resoultion. Any change, erasure, modification or revision of the plat, as approved, shall void this approval.

Signed this ________________ day of ______________ , ______.

By: ______________________________
Chairman, Southeast Planning Board

This plat is valid for filing until ____________________ , _______.

Consent to File

The undersigned owner of the property hereon states that he is familiar with this map, its contents and its legends, and hereby consents to all its said terms and conditions as stated hereon, and to the filing of this map in the Office of the Clerk of the County of Putnam.

Signed this ________________ day of ______________ , _____.

By: ______________________________

Engineering & Land Surveying by Insite Engineering, Surveying & Landscape Architecture, P.C.

Professional Engineer	Professional Land Surveyor
[Seal: State of New York, Jeffrey J. Contelmo, Licensed Professional Engineer, 61931]	

Land Surveyor's Certification

We hereby certify that the survey shown hereon was completed by us on October 20, 2010; that this map was completed December 23, 2019; and that this survey has been prepared in accordance with the existing Code of Practice for Land Surveys as adopted by the New York State Association of Professional Land Surveyors, Inc.

By: ______________________________
INSITE ENGINEERING, SURVEYING, AND LANDSCAPE ARCHITECTURE P.C.
by Nicholas G. Chapis, L.S.
New York State License #049330

Certification by Real Property Tax Dept.

To Real Property Tax Department:

Please certify that the following Tax Map Numbers 68.–2–48.1 & 68.–2–48.2 in the Town of Southeast is the correct tax map number for the attached subdivision map.

____
Director of Real Property Taxes

Certification by Putnam County Commissioner of Finance

The Commissioner of Finance hereby certifies that all town, county and village real property taxes forwarded to this office for collection as of ____/____/____ have been paid for the parcel or parcels described as:

Tax Map No. 68.–2–48.1 & 68.–2–48.2

Signed: ______________________________
Commissioner of Finance

Preliminary Subdivision Plat

known as the

Stateline Subdivision

Situate in

Town of Southeast County of Putnam
State of New York

Date: December 23, 2019

Prepared by:
INSITE ENGINEERING, SURVEYING & LANDSCAPE ARCHITECTURE, P.C.
3 Garrett Place • Carmel, New York 10512
Phone (845) 225–9690 • Fax (845) 225–9717
www.insite–eng.com

© 2019 Insite Engineering, Surveying & Landscape Architecture, P.C.
All Rights Reserved.

03157.100
PP–1.dwg

Z:\E\03157100\SURVEYING\FINAL PLAT\Preliminary Plat\2019-12-09\PP-1-20191209.dwg, 12/23/2019 9:55:32 AM, jrusso, 1:1

GENERAL NOTES:

1. Property line, topography, and existing features taken from field survey prepared by Insite Engineering, Surveying & Landscape Architecture, P.C. updated 10–2–08.
2. All structures and driveways within 200 feet of the site boundaries are shown.
3. The subject property falls within the Brewster School District and the Brewster–Southeast Joint Fire District.
4. The subject property does not contain NYSDEC wetlands based on the New York State Freshwater Wetlands Map.
5. The Town–regulated wetlands were flagged by Steve Marino of Tim Miller Associates, (TMA), Inc. on May 10, 2005, September 30, 2005 and October 18, 2005, by Chris Robbins of TMA on November 12, 2007 and December 29, 2008, and by Brian Bury of TMA on August 18, 2008. The Wetland flags were survey located by Insite Engineering, Surveying and Landscape Architecture P.C. on June 14, 2005, November 13, 2007, October 2, 2008, and December 31, 2008.
6. The watercourses were delineated by Matthew Giannetta of the NYCDEP on June 6, 2006 and the watercourses were survey located on November 2, 2006 by Insite Engineering, Surveying & Landscape Architecture, P.C.
7. There are no floodways or special flood hazard areas on this property in accordance with the official Flood Insurance Rate Map and Flood Boundary and Floodway Map.
8. All proposed utilities shall be installed underground.
9. It shall be the Contractor's responsibility to identify and protect all underground utilities. The contractor shall contact Dig Safely New York at 811 and any other required utility locators prior to the start of construction.
10. There are no existing wells within 200 feet of the proposed SSTS's, and no existing SSTS's within 200 feet of proposed wells, unless otherwise shown.
11. For detailed proposed improvements to U.S. Route 6 and vicinity, including traffic signage, see drawings prepared by Maser Consulting, P.A.
12. Proposed grading contours shown on the approved site development plan drawings shall not be changed, and site grading shall be performed as shown by such contours, unless written permission is obtained to change such contours. For public improvements, such written permission must be obtained from the Planning Board or its duly designated representative. For nonpublic improvements, written permission must be obtained from the Building Inspector of the Town of Southeast.
13. Particular attention shall be given to collection and conveyance of all concentrated streams of water, including but not limited to discharges from roof drains, area drains, yard drains, underdrains (curtain drains, foundation drains and basement drains) and driveway drainage systems to approved points of disposal in the street drainage system or into existing natural streams capable of handling the increased flows from such drains.

CONSTRUCTION NOTES

1. The subject project has coverage under the New York State Department of Environmental Conservation SPDES General Permit for Stormwater Discharges from Construction Activity, permit No. GP–0–15–002. As required by the permit all contractors and subcontractors will be required to sign a certification statement that they understand and agree to comply with the requirements of GP–0–15–002.
2. All pre–cast concrete drainage structures, frames, and grates are to meet H–20 loading requirements.
3. All drainage structures shall be fabricated with pre–cast concrete sections. Drainage structures with knockouts will not be accepted by the Engineer.
4. Design Engineer to approve locations and elevations of all structures prior to placement.
5. Where side inlets are proposed the Contractor shall extend existing swale to the side inlet of the proposed drainage structure.
6. All catch basins and drain inlets shall be 36" X 48" unless otherwise noted on the plans.
7. Engineer to approve final locations and elevations of all structures prior to placement.
8. All signs shall be replaced in their respective preconstruction general location at the completion of construction.
9. The contractor shall field verify all dimensions relative to the scope of work.
10. It shall be the contractor's responsibility to identify and protect all underground utilities. The contractor shall contact Dig Safely New York at 811 or 1–800–962–7962 and any other required utility locators prior to the start of construction.
11. The contractor shall coordinate the layout of the work with the owner, and the project engineer, and eliminate all conflicts including but not limited to utility location conflicts, prior to commencement of any proposed work. The contractor shall expose pertinent existing utilities far enough ahead of construction to verify the size, type, location and invert of the existing utility, and eliminate any conflicts without resulting in a delay in work.
12. The contractor shall field verify the existing grades / utility locations prior to commencement of any work. Any discrepancy shall be reported to the owner and project engineer when identified.
13. All existing vegetation not proposed to be removed shall be protected from damage, and if damaged replaced at the contractor's expense.
14. The contractor will be held responsible for all damage caused to existing utilities / features / facilities during execution of the work not proposed to be modified or removed by this contract. All damage to any existing utilities / features / facilities not proposed to be modified by the contract shall be repaired or replaced by the contractor to the satisfaction of the owner at no additional cost.
15. Original condition shall mean the condition in which the feature was found at the start of construction.
16. The contractor shall provide all removals incidental and necessary to execute the work prescribed in the contract documents. All existing features specified to be removed shall be removed in their entirety unless otherwise authorized in writing by the owner or the Engineer.
17. During execution of the work, the contractor shall be responsible for dewatering and control of surface water in accordance with the New York State Standards and Specifications for Erosion and Sediment Control. The New York State Standards and Specifications for Erosion and Sediment Control can be found at http://www.dec.ny.gov/chemical/29066.html.
18. The contractor shall be responsible for the implementation of erosion and sediment controls as necessary to prevent erosion and migration of sediment outside of the project limits. Erosion and sediment controls may include but are not limited to silt fence and a stabilized construction entrance. All erosion and sediment controls shall be installed in accordance with the New York State Standards and Specifications for Erosion and Sediment Control. Additional erosion and sediment controls may be required during construction by the Engineer.
19. All existing pavement shall be cleaned and swept prior to the completion of construction.
20. All excess soil material shall be disposed of by contractor offsite.
21. It shall be the contractors responsibility to locate existing onsite utilities within the contract limits.
22. The contractor shall stake out the limits of clearing and it shall be reviewed with the project engineer prior to the start of clearing operations. Existing trees to remain outside the limits of clearing shall be protected per the detail.

LARGE RETAIL REQUIREMENTS:

	Required:	Provided:
Minimum Lot Area:	35 acres	40.0 acres ± [3]
Maximum F.A.R.:	0.15	0.144 ±
Maximum Building Height:	35 feet/ 2 stories	32 feet/ 1 stories
Maximum Height of Architectural Elements:	50 feet	36 feet
Minimum Environmental Conservation Buffer:		
Front:	75 feet	180 feet
Side: [2]	50 feet	246 feet [2]
Rear:	50 feet	57 feet
Total Parking Spaces:	67 spaces	195 spaces
Handicap Parking Spaces (1/25 spaces):	6 spaces	6 spaces
Employee Parking Spaces (25%):	49 spaces	49 spaces
Overflow Parking Spaces (25%):	49 spaces	49 spaces
3" Caliper Trees (1/10 spaces)	20 trees	29 trees

1. Large retail area requirement met by combined lot 2 & 3 which will function as a retail/commercial campus.
2. Minimum Environmental Conservation Buffer for side is based on westerly property line, based on lots 2 & 3 comprising the retail/commercial campus.

SR–6 ZONE REQUIREMENTS:

	Required/Permitted:	Lot 2:
Min. Lot Area:	30,000 sf	492,394 sf ±
Min. Lot Frontage:	25'	957' ±
Min. Lot Width:	50'	954' ±
Min. Lot Depth:	50'	530' ±
Min. Yards:		
Front:	35'	270' ±
Side:	35'	111' ±
Rear:	35'	74' ±
Max. Coverage:		
Building Coverage:	15%	14.4% ±
F.A.R.:	0.15 [1]	0.14 ±
Lot Coverage:	45%	35% ±
Min. Open Space Requirement:	55%	65% ±
Max. Bldg Height:		
Stories:	2	2
Feet:	35' [2]	32'
Min. Parking Setback:		
Front:	20'	180' ±
Side:	10'	11' ±
Rear:	10'	57' ±

[1] Per Section 138–63.4, uses falling under "Large Retail Establishment" shall be limited to a Floor Area Ratio (F.A.R.) not to exceed 0.15.

[2] Per Section 138–63.4, "Large Retail Establishment" buildings may be one or two stories to a maximum height of 35'.

PARKING REQUIREMENTS:

Required:

Wholesale Business (100 employees) @ 1 space/1½ employee = 67 spaces
Total spaces provided = 195 spaces

LOADING REQUIREMENTS:

Required:

57,500 s.f. Wholesale Business @ 1 space/40,000 s.f. = 2 spaces
Total spaces provided = 5 spaces

LEGEND

- EXISTING PROPERTY LINE
- EXISTING PROPERTY LINE TO BE EXTINGUISHED
- EXISTING STONE WALL
- EXISTING WIRE FENCE
- EXISTING GUIDE RAIL
- EXISTING CONCRETE CURB
- EXISTING EDGE OF PAVEMENT
- EXISTING WETLAND
- EXISTING WETLAND FLAG
- EXISTING WETLAND BUFFER
- EXISTING RESERVOIR BUFFER
- PROPOSED PROPERTY LINE
- PROPOSED CONCRETE CURB
- PROPOSED RETAINING WALL

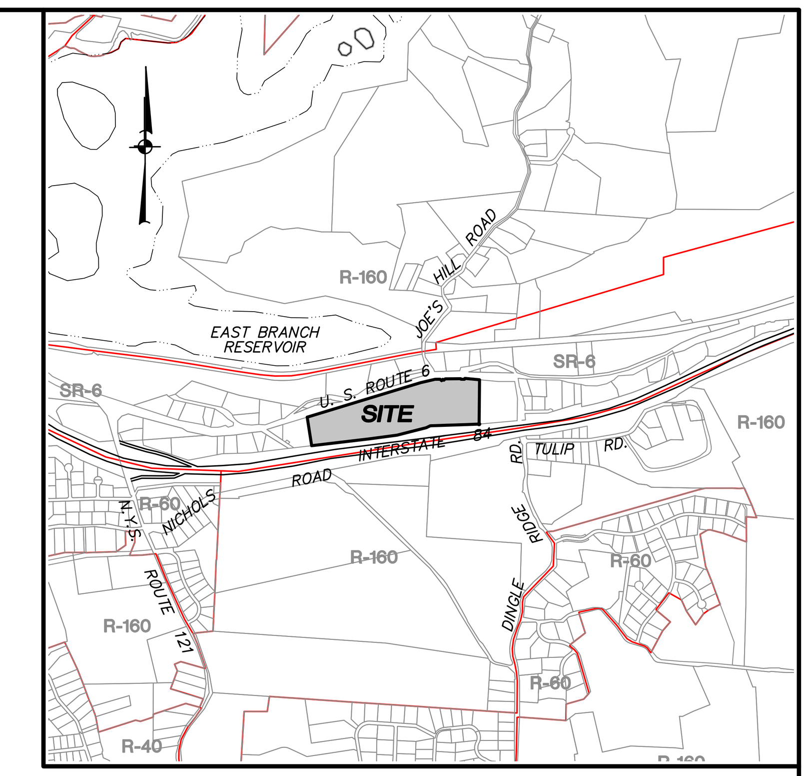

LOCATION MAP SCALE: 1" = 2000'

SITE DATA:

Tax Map No.: 68.–2–48.1, 68.–2–48.2
Total Area: 43.97± Ac.
Zone: SR–6
Proposed Use: Large Retail Establishment

OWNER/APPLICANT:

P.L.I. LLC
1699 Route 6, Suite 1
Carmel, NY 10512

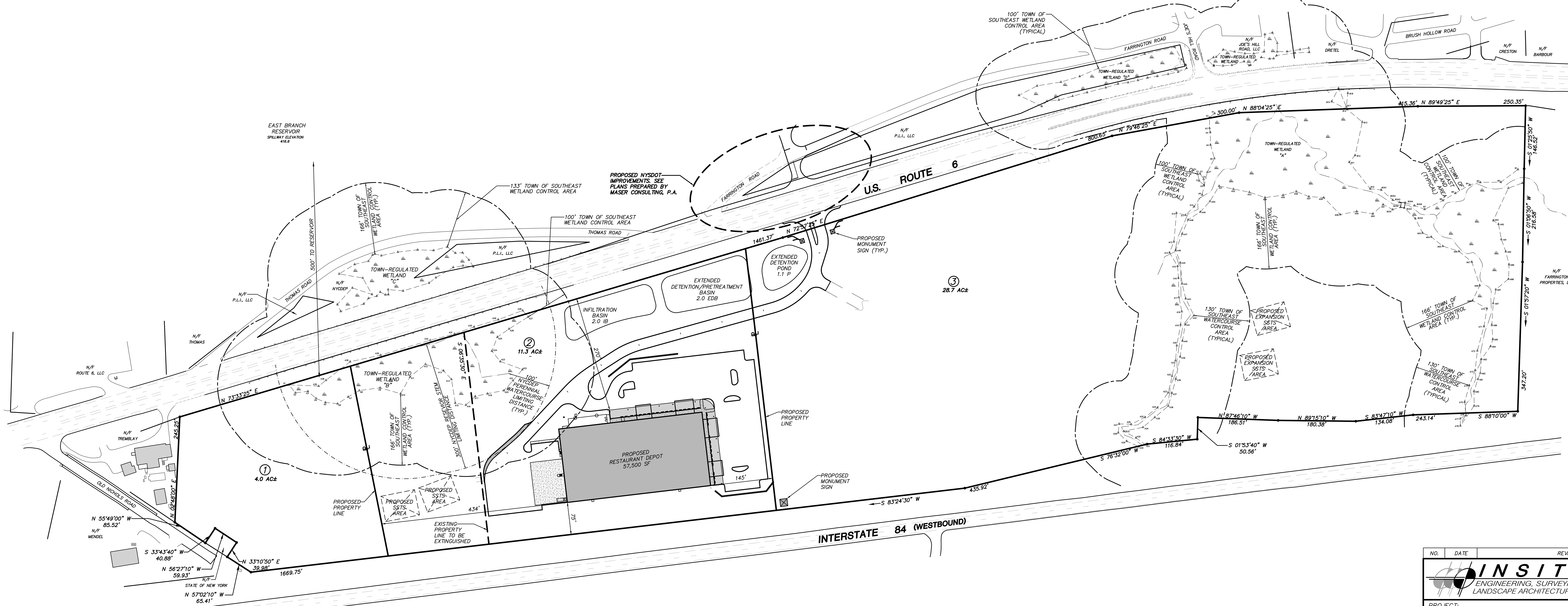

GRAPHIC SCALE
0 50 100 200
(IN FEET)
1 inch = 100 ft.

ALTERATION OF THIS DOCUMENT, UNLESS UNDER THE DIRECTION OF A LICENSED PROFESSIONAL ENGINEER, IS A VIOLATION OF SECTION 7209 OF ARTICLE 145 OF THE EDUCATION LAW.

NO.	DATE	REVISION	BY

INSITE ENGINEERING, SURVEYING & LANDSCAPE ARCHITECTURE, P.C.
3 Garrett Place
Carmel, NY 10512
(845) 225–9690
(845) 225–9717 fax
www.insite–eng.com

PROJECT: RESTAURANT DEPOT
U.S. ROUTE 6, TOWN OF SOUTHEAST, PUTNAM COUNTY, NEW YORK

DRAWING: PROPOSED OVERALL PLAN

STATE OF NEW YORK – JEFFREY J. CONTELMO – 61931 – LICENSED PROFESSIONAL ENGINEER

PROJECT NUMBER	03157.101	PROJECT MANAGER	J.J.C.
DATE	12–23–19	DRAWN BY	J.F.R.
SCALE	1" = 100'	CHECKED BY	J.L.L.

DRAWING NO. OP–1
SHEET 1 / 12

LEGEND

- EXISTING PROPERTY LINE
- EXISTING PROPERTY LINE TO BE EXTINGUISHED
- EXISTING STONE WALL
- EXISTING WIRE FENCE
- EXISTING CONCRETE CURB
- EXISTING EDGE OF PAVEMENT
- EXISTING WETLAND
- EXISTING WETLAND FLAG
- EXISTING WETLAND BUFFER
- EXISTING RESERVOIR BUFFER
- EXISTING 10' CONTOUR
- EXISTING 2' CONTOUR
- EXISTING DECIDUOUS TREE
- EXISTING TREELINE

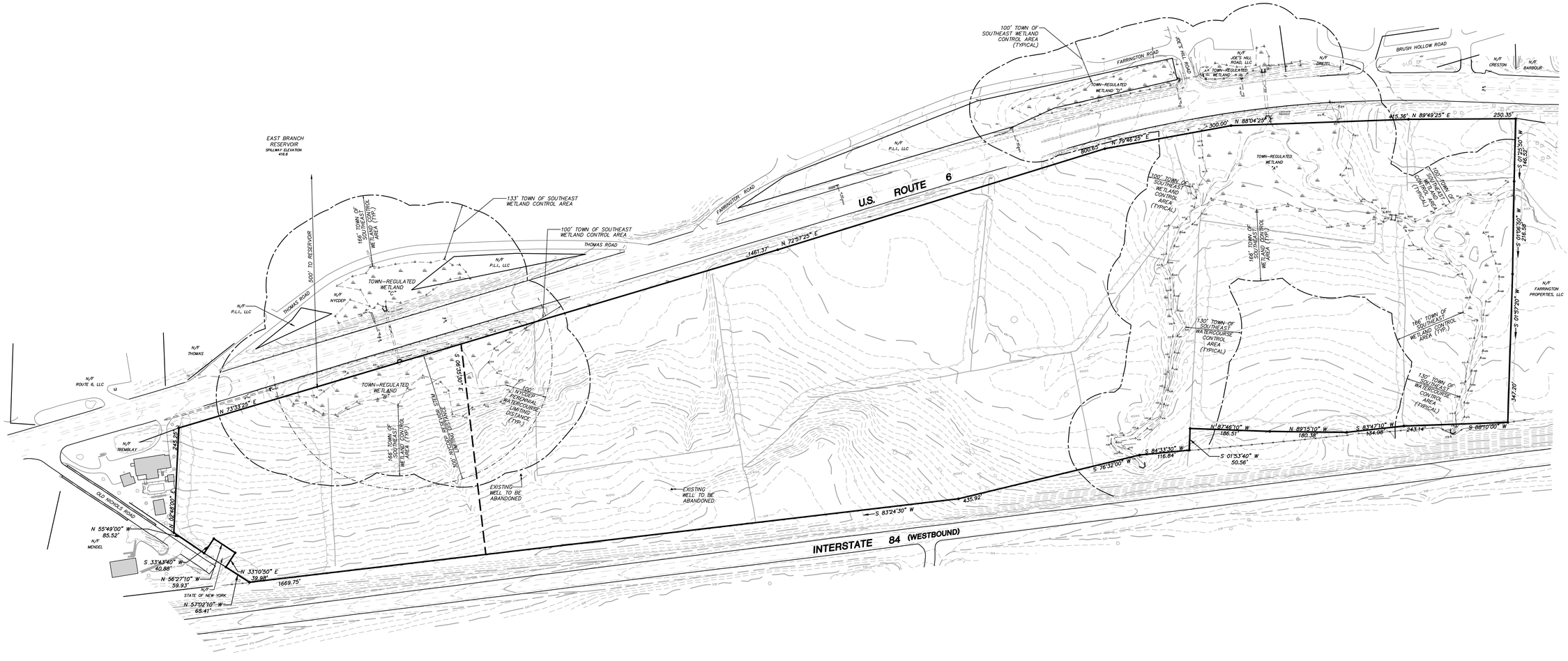

GRAPHIC SCALE

0 50 100 200

(IN FEET)
1 inch = 100 ft.

NO.	DATE	REVISION	BY

INSITE
ENGINEERING, SURVEYING & LANDSCAPE ARCHITECTURE, P.C.

3 Garrett Place
Carmel, NY 10512
(845) 225-9690
(845) 225-9717 fax
www.insite-eng.com

PROJECT:

RESTAURANT DEPOT

U.S. ROUTE 6, TOWN OF SOUTHEAST, PUTNAM COUNTY, NEW YORK

DRAWING:

EXISTING CONDITIONS PLAN

STATE OF NEW YORK · JEFFREY J. CONTRERAS · 091931 · LICENSED PROFESSIONAL ENGINEER

PROJECT NUMBER	03157.101	PROJECT MANAGER	J.J.C.	DRAWING NO.	SHEET
DATE	12-23-19	DRAWN BY	J.F.R.	EX-1	2 / 12
SCALE	1" = 100'	CHECKED BY	J.L.L.		

ALTERATION OF THIS DOCUMENT, UNLESS UNDER THE DIRECTION OF A LICENSED PROFESSIONAL ENGINEER, IS A VIOLATION OF SECTION 7209 OF ARTICLE 145 OF THE EDUCATION LAW.

Z:\E\03157\05-DEI-Restaurant Depot\02 EX-1.dwg, 12/23/2019 9:55:42 AM, jrosas, 1:1

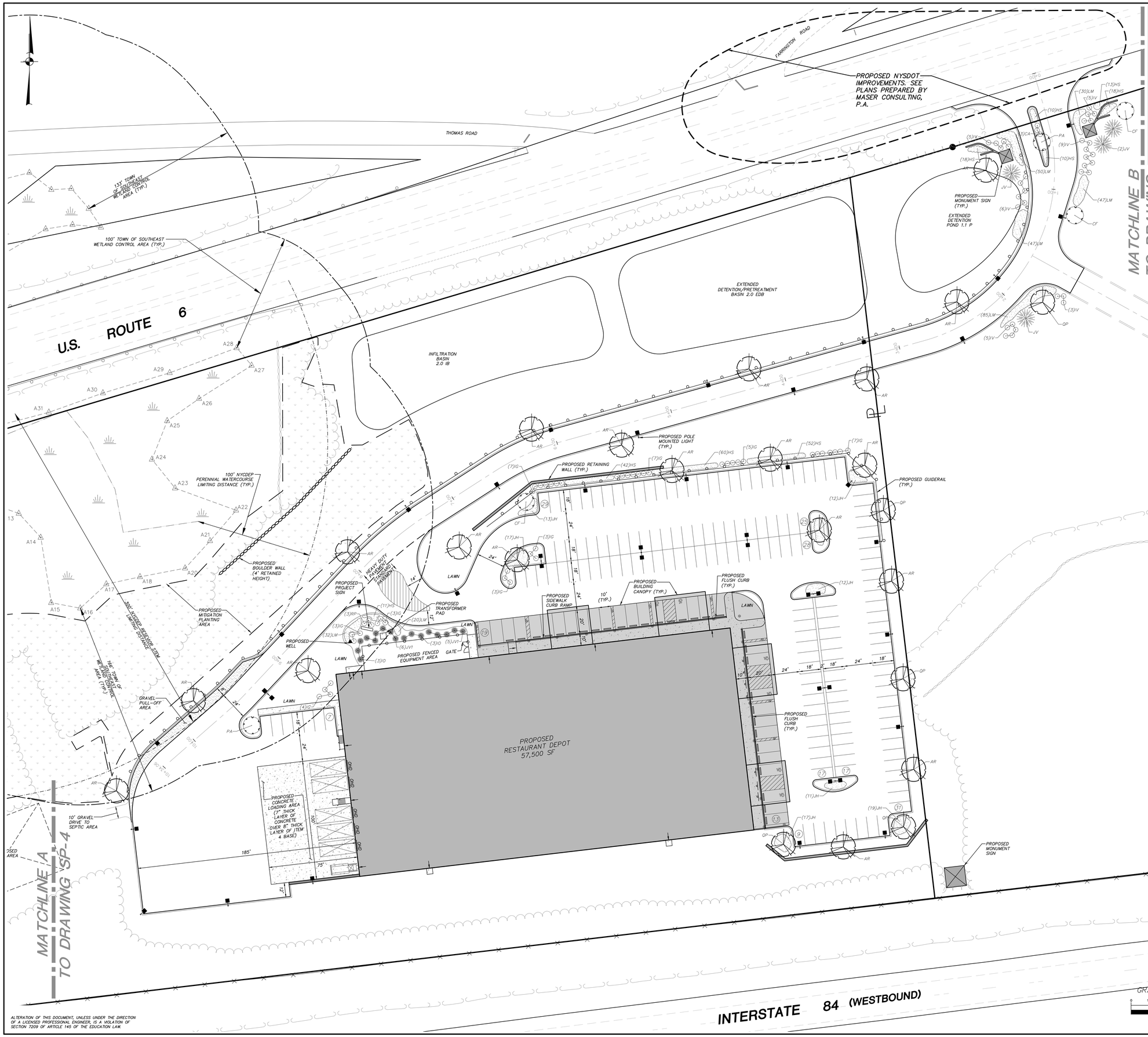

SCHEMATIC PLANT LIST

QTY	KEY	BOTANICAL/COMMON NAME	SIZE	ROOT/SPACING
		EVERGREEN TREES		
6	IO	Ilex opaca / American Holly	5' – 6' HT.	B & B
4	JV	Juniperus virginiana / Eastern Red Cedar	8' – 9' HT.	B & B
11	JV1	Juniperus virginiana / Eastern Red Cedar	5' – 6' HT.	B & B
		SHADE AND FLOWERING TREES		
19	AR	Acer rubrum / Red Maple	3" – 3½" CAL.	B & B
3	CF	Cornus florida / Flowering Dogwood	2½" – 3" CAL.	B & B
2	PA	Prunus americana / American Plum	2½" – 3" CAL.	B & B
5	QP	Quercus palustris / Pin Oak	3" – 3½" CAL.	B & B
		SHRUBS, PERENNIALS & GROUNDCOVERS		
234	HS	Hemerocallis "Stella D'Oro" / Miniature Daylilies	#1 CONT.	CONT./24" O.C.
42	IG	Ilex glabra compacta / Compact Inkberry	18" – 24" HT.	#3 CONT.
33	IV	Ilex verticillata / Winterberry	30" – 36" HT.	#5 CONT.
118	JH	Juniperus horizontalis / Creeping Juniper	#1 CONT.	CONT./36" O.C.
349	LM	Liriope muscari "Big Blue" / Big Blue Liriope	#1 CONT.	CONT./24" O.C.
3	RP	Rhododendron "PJM" / PJM Rhododendron	24" – 30" HT.	#5 CONT.
11	CA	Clethra alnifolia / Sweet Pepperbush	3' – 4' HT.	#5 CONT.

LEGEND

- EXISTING PROPERTY LINE
- EXISTING STONE WALL
- EXISTING WIRE FENCE
- EXISTING GUIDE RAIL
- EXISTING CONCRETE CURB
- EXISTING EDGE OF PAVEMENT
- EXISTING WETLAND
- EXISTING WETLAND FLAG
- EXISTING WETLAND BUFFER
- EXISTING RESERVOIR BUFFER
- EXISTING TREELINE
- PROPOSED # OF STALLS TO BE STRIPED
- PROPOSED CONCRETE CURB
- PROPOSED CENTERLINE
- PROPOSED EDGE OF SIDEWALK
- PROPOSED RETAINING WALL
- PROPOSED PAINTED HANDICAP PARKING SYMBOL
- PROPOSED STRIPED ISLAND
- PROPOSED SINGLE POLE SIGN
- PROPOSED GUIDE RAIL
- PROPOSED POLE MOUNTED LIGHT
- PROPOSED DOOR LOCATION
- OHD — PROPOSED OVERHEAD DOOR LOCATION
- PROPOSED TREELINE
- PROPOSED LANDSCAPING

BUFFER DISTURBANCE AND MITIGATION AREA

LOT	BUFFER DISTURBANCE	MITIGATION AREA
2	54,913 SF ±	55,007 SF ±

GENERAL PLANTING AND SITE SEEDING NOTES:

1. All proposed seeded areas to receive 4" min. depth of topsoil. Soil amendments and fertilizer application rates shall be determined based on specific testing of topsoil material.
2. Upon final grading and placement of topsoil and any required soil amendments, areas to receive permanent vegetation cover in combination with suitable mulch as follows:
   - select seed mixture per drawings and seeding notes.
   - fertilizer applied at the manufacturer's recommended rate using phosphorus-free fertilizer or equivalent. Soil test shall be performed prior to using any fertilizer on site.
   - mulch: salt hay or small grain straw applied at a rate of 90 lbs./1000 s.f. or 2 tons/acre, to be applied and anchored according to New York State Standards and Specifications for Erosion and Sediment Control, August 2005.
   - if the season prevents the establishment of a permanent vegetation cover, the disturbed areas will be mulched with straw or equivalent.
3. The seed mix for lawn areas to be planted between April 1 and May 15, or between August 15 and October 15, or as directed by project representative at a rate of 50 lbs. per acre:

Kentucky Bluegrass	20%
Creeping Red Fescue	40%
Perennial Ryegrass	20%
Annual Ryegrass	20%

4. All proposed planting beds to receive a 12" min. depth of topsoil. Soil amendments and fertilizer application rates shall be determined based on specific testing of topsoil material.
5. All plant material to be nursery grown.
6. Rooted cuttings shall conform with ANSI Z60.1 American Standard for Nursery Stock in all ways including dimensions.
7. Rooted cuttings shall be taken from healthy nursery stock.
8. Rooted cuttings shall be grown under climate conditions similar to those in the locality of the project.
9. Rooted cuttings as noted in Note #14B shall be planted in all locations designed on the plan.
10. The location and layout of landscape plants shown on the site plan shall take precedence in any discrepancies between the quantities of plants shown on the plans and the quantity of plants in the Plant List.
11. Provide a 3" layer of shredded mulch (or as specified) over entire watering saucer at all tree pits or over entire planting bed. Do not place mulch within 3" of tree or shrub trunks.
12. All landscape plantings shall be maintained in a healthy condition at all times. Any dead or diseased plants shall immediately be replaced "in kind" by the contractor (during warranty period) or project owner.
13. All landscape and mitigation plantings shall be installed by hand. No mechanical equipment shall be permitted.
14. The plantings as specified on these drawings are as follows:
    A. Seed Mix for Existing Gravel Storage Area as shown on the drawings at a rate of 30 lbs. per acre:
       Native Right-of-Way Woods Mix (ERNMX-132-1) from Ernst Conservation Seeds of Meadville, PA.

NO.	DATE	REVISION	BY

INSITE
ENGINEERING, SURVEYING & LANDSCAPE ARCHITECTURE, P.C.
3 Garrett Place
Carmel, NY 10512
(845) 225-9690
(845) 225-9717 fax
www.insite-eng.com

PROJECT:
RESTAURANT DEPOT
U.S. ROUTE 6, TOWN OF SOUTHEAST, PUTNAM COUNTY, NEW YORK

DRAWING:
PROPOSED LAYOUT & LANDSCAPE PLAN

STATE OF NEW YORK · JAMES J. CONTANTINO · 071931 · LICENSED PROFESSIONAL ENGINEER

PROJECT NUMBER	03157.101	PROJECT MANAGER	J.J.C.	DRAWING NO.	SHEET
DATE	12-23-19	DRAWN BY	J.F.R.	SP-1	3 / 12
SCALE	1" = 30'	CHECKED BY	J.L.L.		

ALTERATION OF THIS DOCUMENT, UNLESS UNDER THE DIRECTION OF A LICENSED PROFESSIONAL ENGINEER, IS A VIOLATION OF SECTION 7209 OF ARTICLE 145 OF THE EDUCATION LAW.

Z:\CE\03157\01-CEE-Restaurant Depot\03 SP1-Dwg, 12/23/2019 11:56:03 AM, jfreiles, 1:1

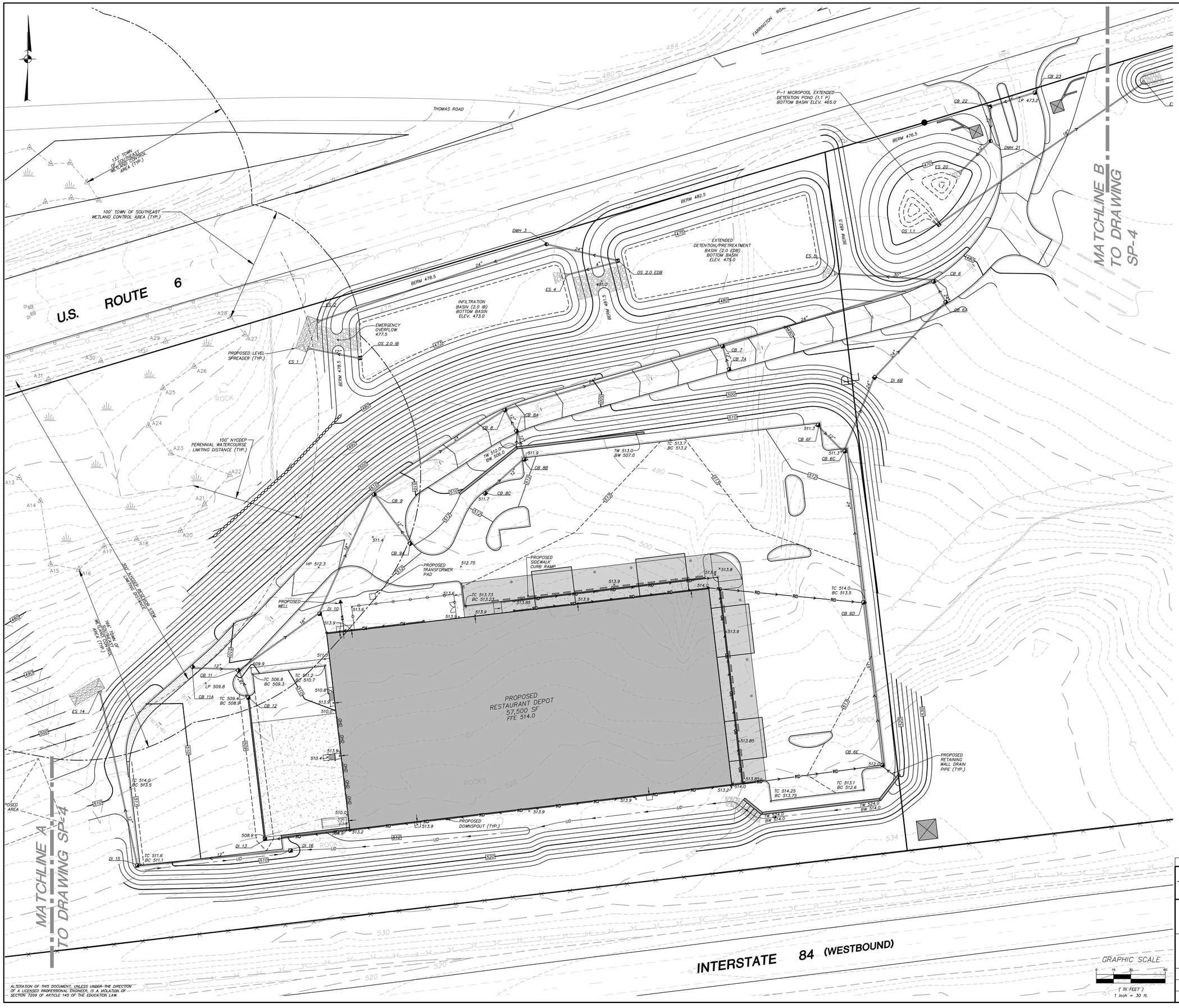

LEGEND

- EXISTING PROPERTY LINE
- EXISTING STONE WALL
- EXISTING WIRE FENCE
- EXISTING GUIDE RAIL
- EXISTING CONCRETE CURB
- EXISTING UTILITY POLE
- EXISTING UNDERGROUND DRAINAGE PIPE
- EXISTING EDGE OF PAVEMENT
- EXISTING WETLAND
- EXISTING WETLAND FLAG
- EXISTING WETLAND BUFFER
- EXISTING RESERVOIR BUFFER
- EXISTING 10' CONTOUR
- EXISTING 2' CONTOUR
- EXISTING TREELINE
- PROPOSED 10' CONTOUR
- PROPOSED 2' CONTOUR
- PROPOSED SPOT ELEVATION
- PROPOSED TOP OF CURB & BOTTOM OF CURB ELEVATIONS
- PROPOSED TOP OF WALL & BOTTOM OF WALL ELEVATIONS
- PROPOSED CATCH BASIN WITH INLET PROTECTION
- PROPOSED OUTLET STRUCTURE
- PROPOSED END SECTION
- PROPOSED WELL
- PROPOSED HDPE DRAINAGE PIPE
- PROPOSED DOMESTIC WATER SERVICE LINE
- PROPOSED GRASS SWALE

PROPOSED DRAINAGE TABLE

STRUCTURE	RIM	INV.	PIPE	LENGTH	SLOPE
CB 23	473.0	470.0			
			12	40	1.0%
CB 22	473.0	469.6			
			12	30	1.0%
DMH 21	475.0	469.3			
			12	39	1.0%
ES 20	–	468.9			
OS 1.1	474.0	469.0			
			18	218	1.0%
ES 19	–	466.8			
DI 16	509.8	506.6			
			12	137	1.0%
DI 15	511.5	505.2			
			12	155	4.6%
ES 14	–	498.0			
DI 13	508.9	505.5			
			15	124	1.0%
CB 12	508.9	IN 504.2 OUT 503.9			
			18	25	1.2%
CB 11	509.7	503.6			
			18	87	1.0%
DI 10	511.8	502.7			
			18	114	1.1%
CB 9	510.6	IN 501.5 OUT 501.0			
			24	135	1.0%
CB 8	504.4	499.6			
			24	197	5.5%
CB 7	493.2	488.7			
			24	193	5.5%
CB 6	482.0	IN 478.0 OUT 477.5			
			30	87	1.1%
ES 5	–	476.5			
CB 11A	509.1	505.9			
			12	41	1.2%
CB 11	509.7	505.4			
CB 9A	511.5	508.3			
			12	53	1.7%
CB 9	510.6	507.4			
CB 8C	511.7	508.5			
			12	45	1.1%
CB 8B	511.9	508.0			
			12	25	27.2%
CB 8A	504.4	501.2			
			12	21	2.4%
CB 8	504.4	500.7			
CB 7A	493.2	490.0			
			12	21	2.4%
CB 7	493.2	489.5			
CB 6E	512.0	508.6			
			15	142	1.1%
CB 6D	513.5	IN 507.1 OUT 506.3			
			24	132	1.1%
CB 6C	511.3	504.9			
			24	69	25.5%
DI 6B	491.8	487.3			
			24	90	10.6%
CB 6A	482.0	477.8			
			24	21	1.4%
CB 6	482.0	477.5			
CB 6F	511.3	508.1			
			12	27	1.9%
CB 6C	511.3	507.6			
OS 2.0 EDB	479.5	474.0			
			4	48	1.0%
ES 4	–	473.5			
OS 2.0 EDB	479.5	474.0			
			24	65	1.1%
DMH 3	478.5	473.3			
			24	210	1.1%
ES 2	–	471.0			
OS 2.0 IB	477.5	473.0			
			12	45	4.4%
ES 1	–	471.0			

NO.	DATE	REVISION	BY

INSITE
ENGINEERING, SURVEYING & LANDSCAPE ARCHITECTURE, P.C.
3 Garrett Place
Carmel, NY 10512
(845) 225-9690
(845) 225-9717 fax
www.insite-eng.com

PROJECT:
RESTAURANT DEPOT
U.S. ROUTE 6, TOWN OF SOUTHEAST, PUTNAM COUNTY, NEW YORK

DRAWING:
PROPOSED GRADING & UTILITIES PLAN

STATE OF NEW YORK · JEFFREY J. CONTANTINO · 31931 · LICENSED PROFESSIONAL ENGINEER

PROJECT NUMBER	03157.101	PROJECT MANAGER	J.J.C.	DRAWING NO.	SHEET
DATE	12-23-19	DRAWN BY	J.F.R.	SP-2	4 / 12
SCALE	1" = 30'	CHECKED BY	J.L.L.		

ALTERATION OF THIS DOCUMENT, UNLESS UNDER THE DIRECTION OF A LICENSED PROFESSIONAL ENGINEER, IS A VIOLATION OF SECTION 7209 OF ARTICLE 145 OF THE EDUCATION LAW.

Z:\CE\03157\01-CEE-Restaurant Depot\04-SP-2.dwg, 12/23/2019 11:55:51 AM, jrotter, 1:1

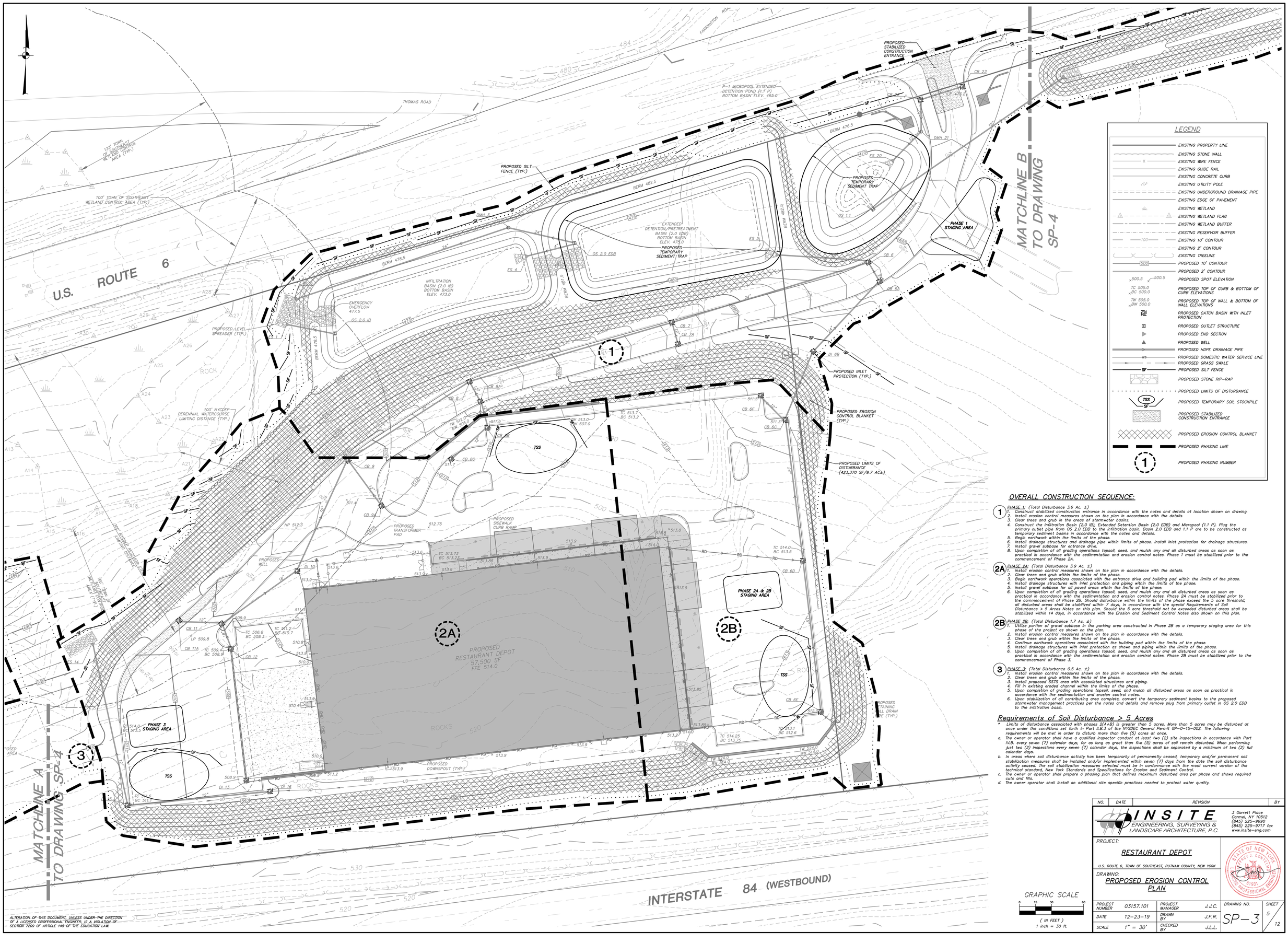

LEGEND

- EXISTING PROPERTY LINE
- EXISTING STONE WALL
- EXISTING WIRE FENCE
- EXISTING GUIDE RAIL
- EXISTING CONCRETE CURB
- EXISTING UTILITY POLE
- EXISTING UNDERGROUND DRAINAGE PIPE
- EXISTING EDGE OF PAVEMENT
- EXISTING WETLAND
- EXISTING WETLAND FLAG
- EXISTING WETLAND BUFFER
- EXISTING RESERVOIR BUFFER
- EXISTING 10' CONTOUR
- EXISTING 2' CONTOUR
- EXISTING TREELINE
- PROPOSED 10' CONTOUR
- PROPOSED 2' CONTOUR
- PROPOSED SPOT ELEVATION
- PROPOSED TOP OF CURB & BOTTOM OF CURB ELEVATIONS
- PROPOSED TOP OF WALL & BOTTOM OF WALL ELEVATIONS
- PROPOSED CATCH BASIN WITH INLET PROTECTION
- PROPOSED OUTLET STRUCTURE
- PROPOSED END SECTION
- PROPOSED WELL
- PROPOSED HDPE DRAINAGE PIPE
- PROPOSED DOMESTIC WATER SERVICE LINE
- PROPOSED GRASS SWALE
- PROPOSED SILT FENCE
- PROPOSED STONE RIP-RAP
- PROPOSED LIMITS OF DISTURBANCE
- PROPOSED TEMPORARY SOIL STOCKPILE
- PROPOSED STABILIZED CONSTRUCTION ENTRANCE
- PROPOSED EROSION CONTROL BLANKET
- PROPOSED PHASING LINE
- PROPOSED PHASING NUMBER

OVERALL CONSTRUCTION SEQUENCE:

1 *PHASE 1: (Total Disturbance 3.6 Ac. ±)*

1. Construct stabilized construction entrance in accordance with the notes and details at location shown on drawing.
2. Install erosion control measures shown on the plan in accordance with the details.
3. Clear trees and grub in the areas of stormwater basins.
4. Construct the Infiltration Basin (2.0 IB), Extended Detention Basin (2.0 EDB) and Micropool (1.1 P). Plug the primary outlet pipe from OS 2.0 EDB to the infiltration basin. Basin 2.0 EDB and 1.1 P are to be constructed as temporary sediment basins in accordance with the notes and details.
5. Begin earthwork within the limits of the phase.
6. Install drainage structures and drainage pipe within limits of phase. Install inlet protection for drainage structures.
7. Install gravel subbase for entrance drive.
8. Upon completion of all grading operations topsoil, seed, and mulch any and all disturbed areas as soon as practical in accordance with the sedimentation and erosion control notes. Phase 1 must be stabilized prior to the commencement of Phase 2A.

2A *PHASE 2A: (Total Disturbance 3.9 Ac. ±)*

1. Install erosion control measures shown on the plan in accordance with the details.
2. Clear trees and grub within the limits of the phase.
3. Begin earthwork operations associated with the entrance drive and building pad within the limits of the phase.
4. Install drainage structures with inlet protection and piping within the limits of the phase.
5. Install gravel subbase for all paved areas within the limits of the phase.
6. Upon completion of all grading operations topsoil, seed, and mulch any and all disturbed areas as soon as practical in accordance with the sedimentation and erosion control notes. Phase 2A must be stabilized prior to the commencement of Phase 2B. Should disturbance within the limits of the phase exceed the 5 acre threshold, all disturbed areas shall be stabilized within 7 days, in accordance with the special Requirements of Soil Disturbance > 5 Acres Notes on this plan. Should the 5 acre threshold not be exceeded disturbed areas shall be stabilized within 14 days, in accordance with the Erosion and Sediment Control Notes also shown on this plan.

2B *PHASE 2B: (Total Disturbance 1.7 Ac. ±)*

1. Utilize portion of gravel subbase in the parking area constructed in Phase 2B as a temporary staging area for this phase of the project as shown on the plan.
2. Install erosion control measures shown on the plan in accordance with the details.
3. Clear trees and grub within the limits of the phase.
4. Continue earthwork operations associated with the building pad within the limits of the phase.
5. Install drainage structures with inlet protection as shown and piping within the limits of the phase.
6. Upon completion of all grading operations topsoil, seed, and mulch any and all disturbed areas as soon as practical in accordance with the sedimentation and erosion control notes. Phase 2B must be stabilized prior to the commencement of Phase 3.

3 *PHASE 3: (Total Disturbance 0.5 Ac. ±)*

1. Install erosion control measures shown on the plan in accordance with the details.
2. Clear trees and grub within the limits of the phase.
3. Install proposed SSTS area with associated structures and piping.
4. Fill in existing eroded channel within the limits of the phase.
5. Upon completion of grading operations topsoil, seed, and mulch all disturbed areas as soon as practical in accordance with the sedimentation and erosion control notes.
6. Upon stabilization of all contributing area complete, convert the temporary sediment basins to the proposed stormwater management practices per the notes and details and remove plug from primary outlet in OS 2.0 EDB to the infiltration basin.

Requirements of Soil Disturbance > 5 Acres

* Limits of disturbance associated with phases 2(A+B) is greater than 5 acres. More than 5 acres may be disturbed at once under the conditions set forth in Part II.B.3 of the NYSDEC General Permit GP-0-15-002. The following requirements will be met in order to disturb more than five (5) acres at once.

a. The owner or operator shall have a qualified inspector conduct at least two (2) site inspections in accordance with Part IV.B. every seven (7) calendar days, for as long as great than five (5) acres of soil remain disturbed. When performing just two (2) inspections every seven (7) calendar days, the inspections shall be separated by a minimum of two (2) full calendar days.

b. In areas where soil disturbance activity has been temporarily of permanently ceased, temporary and/or permanent soil stabilization measures shall be installed and/or implemented within seven (7) days from the date the soil disturbance activity ceased. The soil stabilization measures selected must be in conformance with the most current version of the technical standard, New York Standards and Specifications for Erosion and Sediment Control.

c. The owner or operator shall prepare a phasing plan that defines maximum disturbed area per phase and shows required cuts and fills.

d. The owner operator shall install an additional site specific practices needed to protect water quality.

GRAPHIC SCALE

0 15 30 60

(IN FEET)
1 inch = 30 ft.

NO.	DATE	REVISION	BY

INSITE
ENGINEERING, SURVEYING & LANDSCAPE ARCHITECTURE, P.C.
3 Garrett Place
Carmel, NY 10512
(845) 225-9690
(845) 225-9717 fax
www.insite-eng.com

PROJECT:
RESTAURANT DEPOT
U.S. ROUTE 6, TOWN OF SOUTHEAST, PUTNAM COUNTY, NEW YORK

DRAWING:
PROPOSED EROSION CONTROL PLAN

STATE OF NEW YORK · JEFFREY J. CONTARDO · 51931 · LICENSED PROFESSIONAL ENGINEER

PROJECT NUMBER	03157.101	PROJECT MANAGER	J.J.C.
DATE	12-23-19	DRAWN BY	J.F.R.
SCALE	1" = 30'	CHECKED BY	J.L.L.

DRAWING NO. SP-3

SHEET 5 / 12

ALTERATION OF THIS DOCUMENT, UNLESS UNDER THE DIRECTION OF A LICENSED PROFESSIONAL ENGINEER, IS A VIOLATION OF SECTION 7209 OF ARTICLE 145 OF THE EDUCATION LAW.

Z:\E-03157.00_Old Restaurant Depot\05-SP-1.dwg, 12/23/2019 10:54:44 AM, jrosen, 1:1

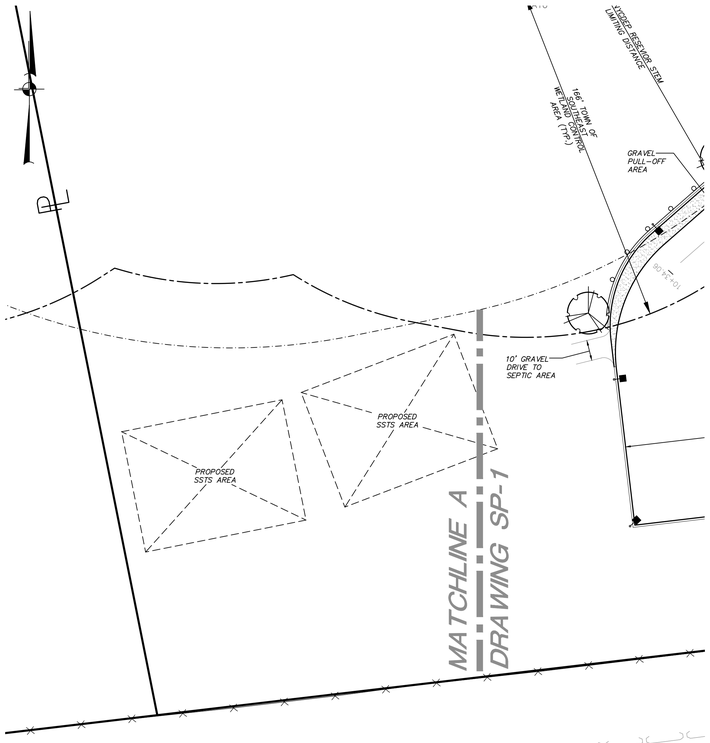

LAYOUT AND LANDSCAPING FOR SSTS

SCALE: 1 inch = 30 ft.

LEGEND

- EXISTING PROPERTY LINE
- EXISTING STONE WALL
- EXISTING WIRE FENCE
- EXISTING GUIDE RAIL
- EXISTING CONCRETE CURB
- EXISTING EDGE OF PAVEMENT
- EXISTING WETLAND
- EXISTING WETLAND FLAG
- EXISTING WETLAND BUFFER
- EXISTING RESERVOIR BUFFER
- EXISTING TREELINE
- PROPOSED # OF STALLS TO BE STRIPED
- PROPOSED CONCRETE CURB
- PROPOSED CENTERLINE
- PROPOSED EDGE OF SIDEWALK
- PROPOSED RETAINING WALL
- PROPOSED PAINTED HANDICAP PARKING SYMBOL
- PROPOSED STRIPED ISLAND
- PROPOSED SINGLE POLE SIGN
- PROPOSED GUIDE RAIL
- PROPOSED POLE MOUNTED LIGHT
- PROPOSED DOOR LOCATION
- OHD — PROPOSED OVERHEAD DOOR LOCATION
- PROPOSED TREELINE
- PROPOSED LANDSCAPING

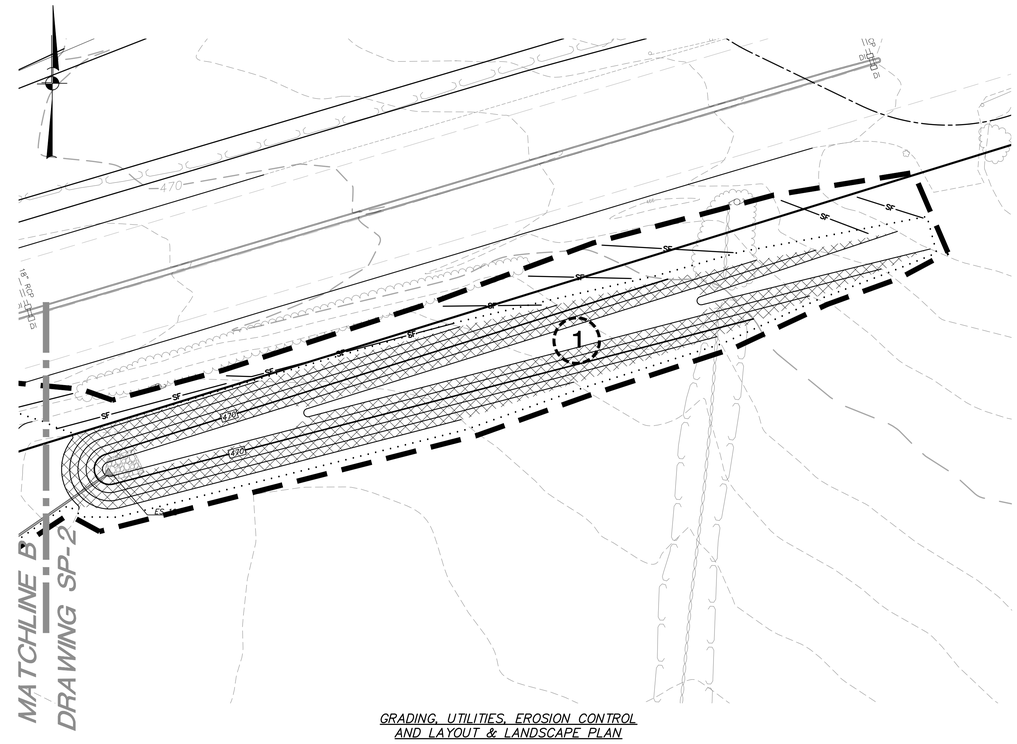

GRADING, UTILITIES, EROSION CONTROL AND LAYOUT & LANDSCAPE PLAN

SCALE: 1 inch = 30 ft.

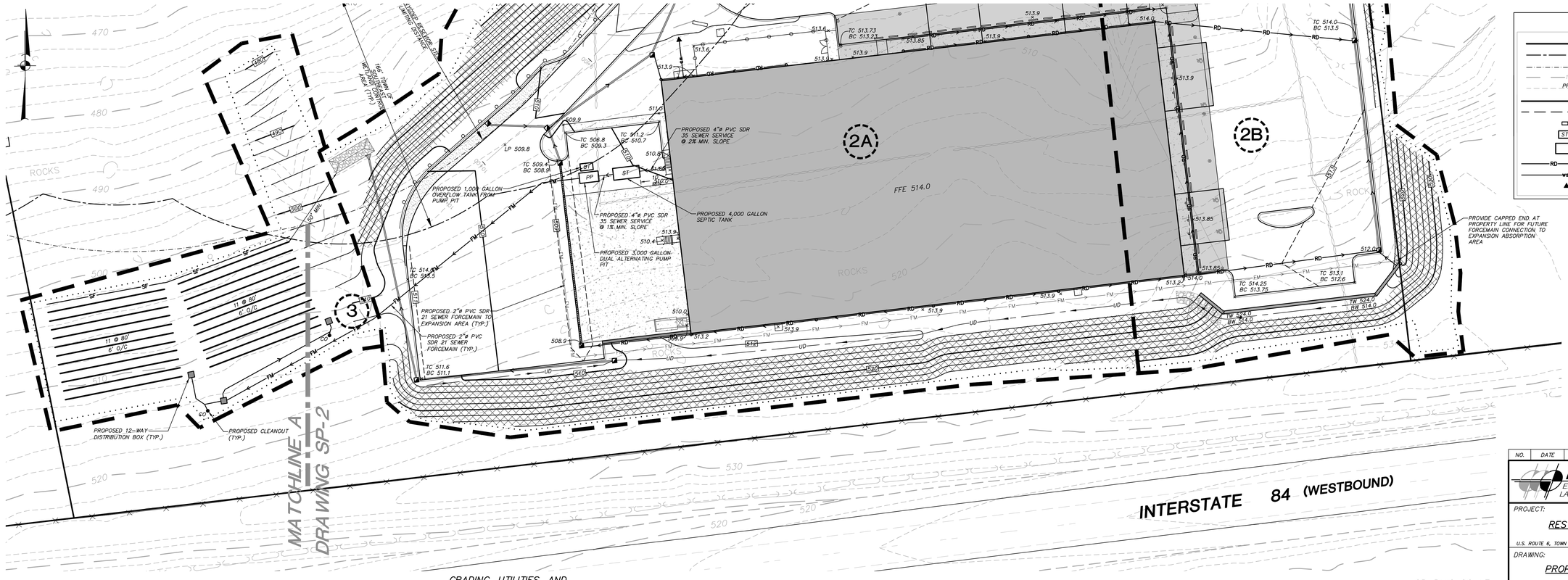

GRADING, UTILITIES, AND EROSION CONTROL FOR SSTS

SCALE: 1 inch = 30 ft.

LEGEND

- EXISTING PROPERTY LINE
- EXISTING WETLAND BUFFER
- EXISTING RESERVOIR BUFFER
- EXISTING 10' CONTOUR
- EXISTING 2' CONTOUR
- PROPOSED PRIMARY ABSORPTION TRENCH
- PROPOSED EXPANSION ABSORPTION TRENCH
- DB — PROPOSED DISTRIBUTION BOX (DB)
- ST — PROPOSED SEPTIC TANK
- PROPOSED PUMP PIT
- RD — PROPOSED ROOF DRAIN
- WS — PROPOSED WATER SERVICE CONNECTION
- PROPOSED WELL

GRAPHIC SCALE

0 15 30 60

(IN FEET)
1 inch = 30 ft.

NO.	DATE	REVISION	BY

INSITE
ENGINEERING, SURVEYING & LANDSCAPE ARCHITECTURE, P.C.
3 Garrett Place
Carmel, NY 10512
(845) 225-9690
(845) 225-9717 fax
www.insite-enp.com

PROJECT:
RESTAURANT DEPOT
U.S. ROUTE 6, TOWN OF SOUTHEAST, PUTNAM COUNTY, NEW YORK

DRAWING:
PROPOSED SITE PLAN

STATE OF NEW YORK · JEFFREY J. COVELLO · 51931 · LICENSED PROFESSIONAL ENGINEER

PROJECT NUMBER	03157.101	PROJECT MANAGER	J.J.C.	DRAWING NO.	SHEET
DATE	12-23-19	DRAWN BY	J.F.R.	SP-4	6 / 12
SCALE	1" = 30'	CHECKED BY	J.L.L.		

ALTERATION OF THIS DOCUMENT, UNLESS UNDER THE DIRECTION OF A LICENSED PROFESSIONAL ENGINEER, IS A VIOLATION OF SECTION 7209 OF ARTICLE 145 OF THE EDUCATION LAW.

Z:\03157\02-DB\Restaurant Depot\05-SP-4.dwg, 12/23/2019 11:53:43 AM, jfrankin, 1:1

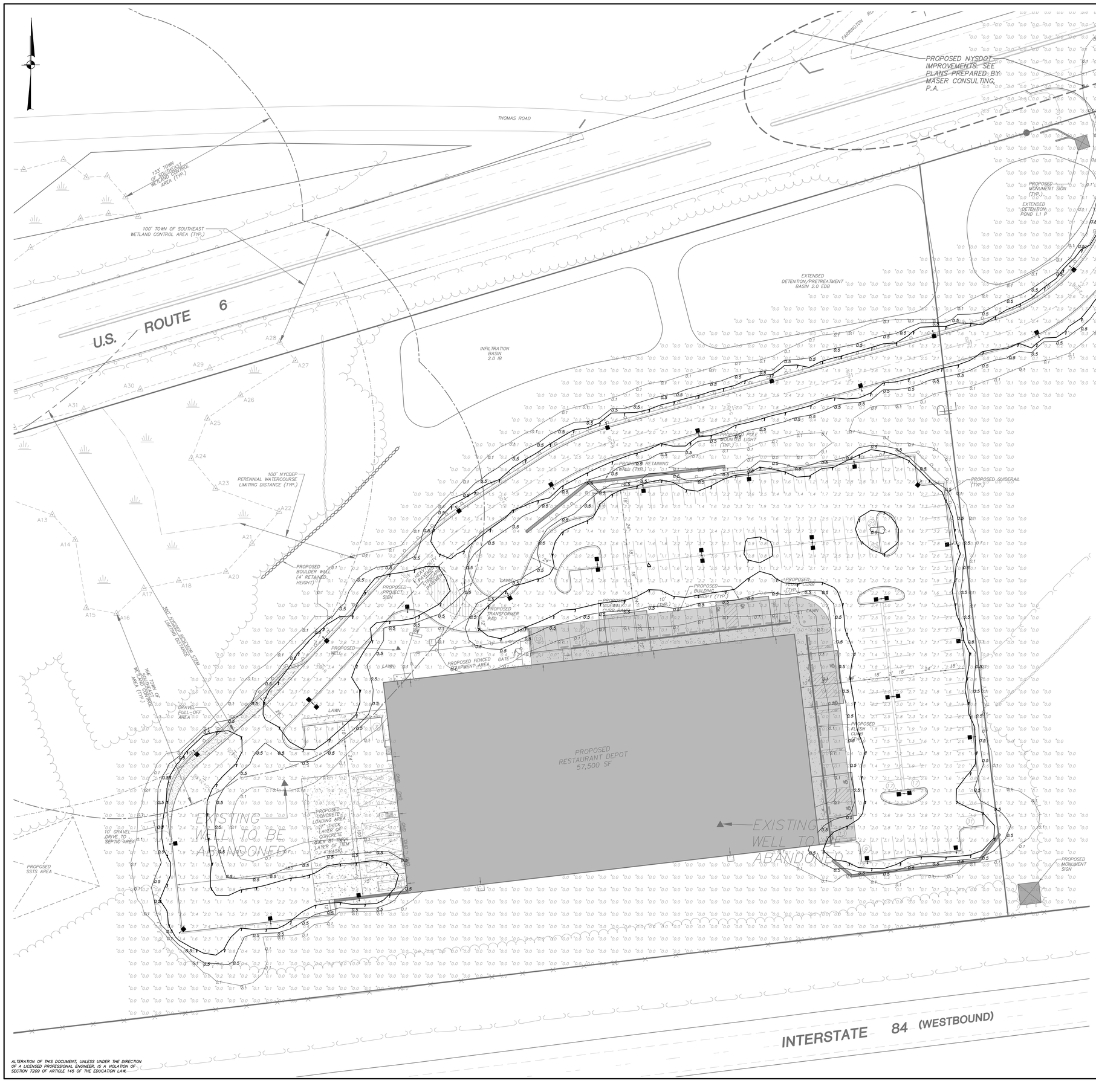

LEGEND

- EXISTING PROPERTY LINE
- EXISTING STONE WALL
- EXISTING WIRE FENCE
- EXISTING GUIDE RAIL
- EXISTING CONCRETE CURB
- EXISTING EDGE OF PAVEMENT
- EXISTING WETLAND
- EXISTING WETLAND FLAG
- EXISTING WETLAND BUFFER
- EXISTING RESERVOIR BUFFER
- EXISTING TREELINE
- PROPOSED # OF STALLS TO BE STRIPED
- PROPOSED CONCRETE CURB
- PROPOSED CENTERLINE
- PROPOSED EDGE OF SIDEWALK
- PROPOSED RETAINING WALL
- PROPOSED PAINTED HANDICAP PARKING SYMBOL
- PROPOSED STRIPED ISLAND
- PROPOSED SINGLE POLE SIGN
- PROPOSED GUIDE RAIL
- PROPOSED POLE MOUNTED LIGHT
- PROPOSED DOOR LOCATION
- OHD — PROPOSED OVERHEAD DOOR LOCATION
- PROPOSED TREELINE

D-Series Size 1

LED Area Luminaire

LITHONIA LIGHTING

Specifications

EPA:	1.01 ft² (0.09 m²)
Length:	33" (83.8 cm)
Width:	13" (33.0 cm)
Height H1:	7-1/2" (19.0 cm)
Height H2:	3-1/2"
Weight (max):	27 lbs (12.2 kg)

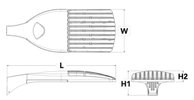

Introduction

The modern styling of the D-Series is striking yet unobtrusive - making a bold, progressive statement even as it blends seamlessly with its environment. The D-Series distills the benefits of the latest in LED technology into a high performance, high efficacy, long-life luminaire.

The outstanding photometric performance results in sites with excellent uniformity, greate pole spacing and lower power density. It is ideal for replacing up to 750W metal halide in pedestrian and area lighting applications withr typical energy savings of 65% and expected service life of over 100,000 hours.

LIGHT CONTOUR LEGEND

0.1	0.10 Foot Candles
0.5	0.50 Foot Candles
1	1.00 Foot Candles
2	2.00 Foot Candles

* Photometric calculations shown on plan are in foot candles.

STATISTICS

DESCRIPTION	SYMBOL	AVG	MAX	MIN	AVG/MAX	AVG/MIN
Project Area	+	0.6 fc	3.5 fc	0 fc	N/A	N/A

LUMINAIRE SCHEDULE

Symbol	Qty	Catalog Number	Description	Lamp	Mounting Height
	28	DSX1 LED P1 40K BLC MVOLT	LITHONIA D-SERIES SIZE 1 LED AREA LUMINAIRE	LED	20' – 0"
	7	DSX1 LED P1 40K BLC MVOLT	LITHONIA D-SERIES SIZE 1 DUAL MOUNT LED AREA LUMINAIRE	LED	20' – 0"

LIGHTING NOTES:

1. All lighting shall be as noted on the plan or approved equal.
2. Style and finish of all luminaires to be selected by owner.
3. Calculation values shown in this plan are taken on a horizontal plane at ground level using a 0.90 light loss factor for LEDs. Topographical information and landscaping have not been accounted for in these calculations.
4. All lighting on this plan shall be directed and/or shielded so as to preclude objectionable glare from being observable from adjoining streets and properties.
5. Photometric modeling based on similar or specified fixtures.
6. Building design shall include building mounted lighting and under canopy lighting, which is not depicted on this plan.

GRAPHIC SCALE

0 15 30 60

(IN FEET)
1 inch = 30 ft.

NO.	DATE	REVISION	BY

INSITE
ENGINEERING, SURVEYING & LANDSCAPE ARCHITECTURE, P.C.

3 Garrett Place
Carmel, NY 10512
(845) 225-9690
(845) 225-9717 fax
www.insite-eng.com

PROJECT:

RESTAURANT DEPOT

U.S. ROUTE 6, TOWN OF SOUTHEAST, PUTNAM COUNTY, NEW YORK

DRAWING:

PROPOSED LIGHTING PLAN

STATE OF NEW YORK · JEFFREY J. CONTENTO · 081931 · LICENSED PROFESSIONAL ENGINEER

PROJECT NUMBER	03157.101	PROJECT MANAGER	J.J.C.	DRAWING NO.	SHEET
DATE	12-23-19	DRAWN BY	J.F.R.	LP-1	7 / 12
SCALE	1" = 30'	CHECKED BY	J.L.L.		

ALTERATION OF THIS DOCUMENT, UNLESS UNDER THE DIRECTION OF A LICENSED PROFESSIONAL ENGINEER, IS A VIOLATION OF SECTION 7209 OF ARTICLE 145 OF THE EDUCATION LAW.

Z:\E\03157\00-CB\Restaurant Depot\157-LP-1.dwg, 12/23/2019 10:55:39 AM, jmatte, 1:1

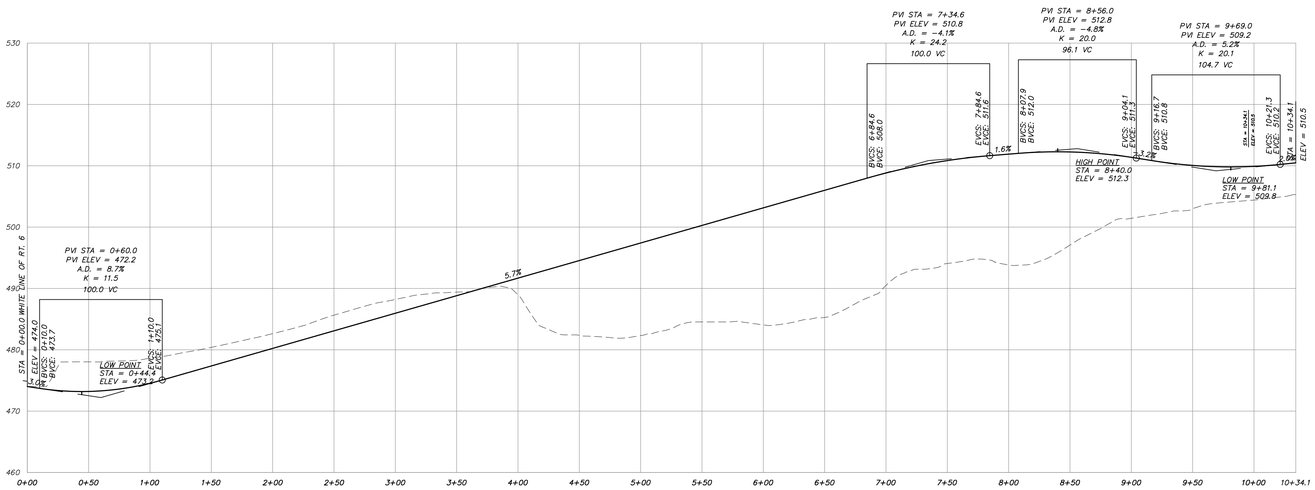

PROPOSED ACCESS DRIVE

SCALE: HORZ. 1" = 50'
VERT. 1" = 10'

ALTERATION OF THIS DOCUMENT, UNLESS UNDER THE DIRECTION OF A LICENSED PROFESSIONAL ENGINEER, IS A VIOLATION OF SECTION 7209 OF ARTICLE 145 OF THE EDUCATION LAW.

NO.	DATE	REVISION	BY

INSITE
ENGINEERING, SURVEYING & LANDSCAPE ARCHITECTURE, P.C.
3 Garrett Place
Carmel, NY 10512
(845) 225-9690
(845) 225-9717 fax
www.insite-enp.com

PROJECT:

RESTAURANT DEPOT

U.S. ROUTE 6, TOWN OF SOUTHEAST, PUTNAM COUNTY, NEW YORK

DRAWING:

ROAD PROFILES

STATE OF NEW YORK · JEFFREY J. COVELLO · 081931 · LICENSED PROFESSIONAL ENGINEER

PROJECT NUMBER	03157.101	PROJECT MANAGER	J.J.C.	DRAWING NO.	SHEET
DATE	12-23-19	DRAWN BY	J.F.R.	PR-1	8 / 12
SCALE	AS NOTED	CHECKED BY	J.L.L.		

Z:\03157\02-Site\Restaurant Depot\03PR1.dwg, 12/23/2019 9:30:43 AM, Harris, 1:1

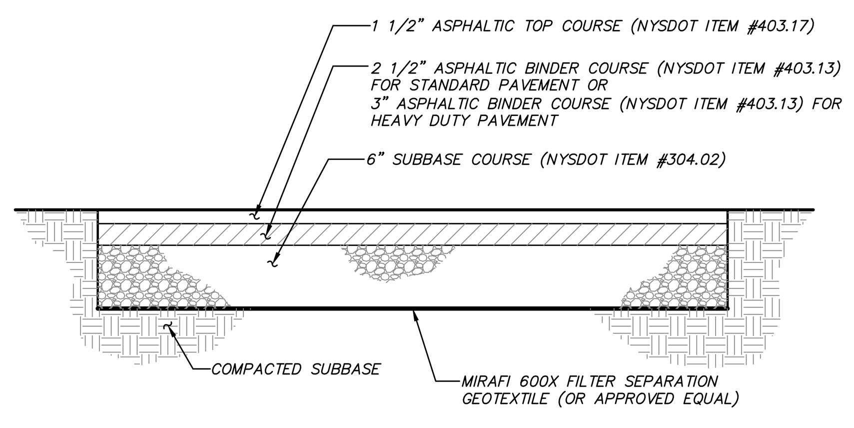

ASPHALT PAVEMENT DETAIL
(N.T.S.)

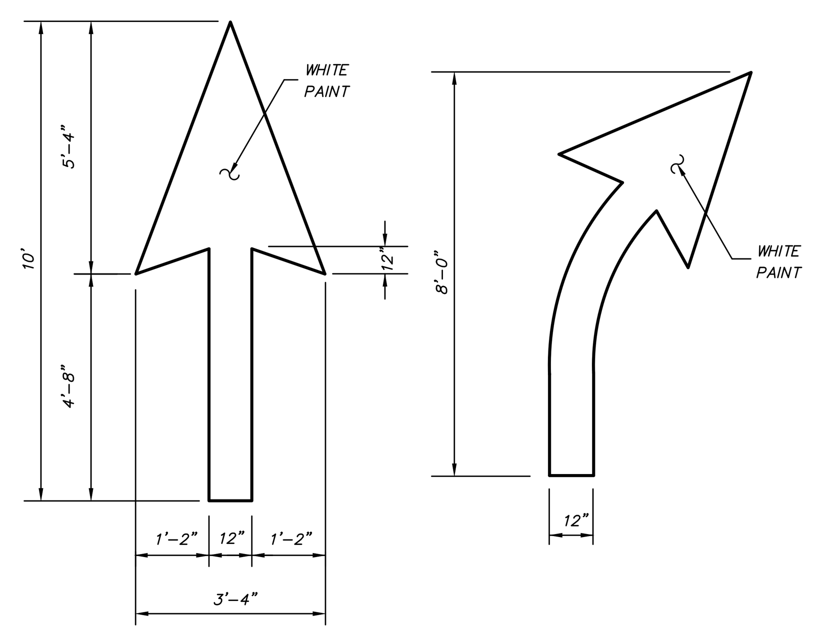

NOTE: INSTALLATION TO CONFORM WITH CURRENT NYSDOT STANDARDS AND SPECIFICATIONS.

DIRECTIONAL ARROWS DETAIL
(N.T.S.)

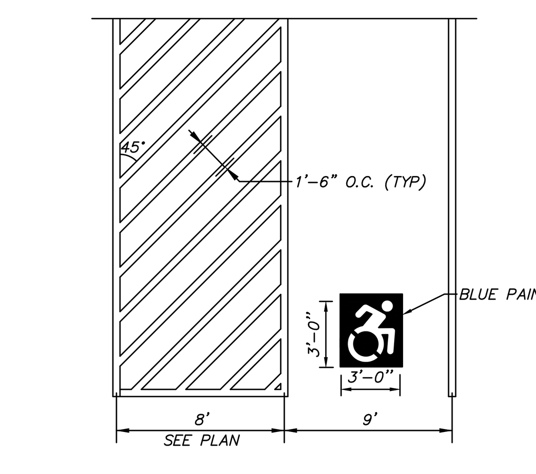

NOTE:
1. ALL ACCESSIBLE STRIPING SHALL BE 4" WIDE BLUE PAINT

PAINTED ACCESSIBLE PARKING DETAIL
(N.T.S.)

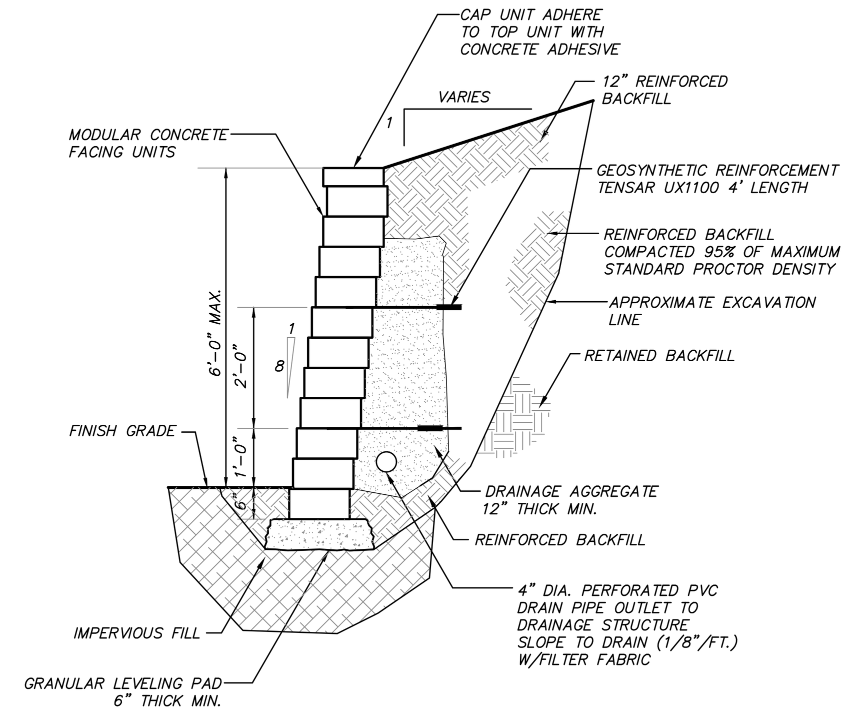

NOTES:
1. STRIP VEGETATION AND ORGANIC SOIL FROM WALL AREA.
2. BENCH CUT ALL EXCAVATED SLOPES.
3. DO NOT OVER EXCAVATE UNLESS DIRECTED BY SITE ENGINEER TO REMOVE UNSUITABLE SOIL.
4. SITE ENGINEER SHALL VERIFY FOUNDATION SOILS AS BEING COMPETENT PER THE DESIGN STANDARDS AND PARAMETERS.
5. LEVELING PAD SHALL CONSIST OF COMPACTED COARSE SAND OR CRUSHED GRAVEL, 6" THICK MIN.
6. CONTRACTOR MAY OPT FOR A LEAN CONCRETE PAD. CONCRETE PAD SHALL BE UNREINFORCED, 3" THICK MAXIMUM.
7. MINIMUM EMBEDMENT OF WALL BELOW FINISH GRADE SHALL BE 6".
8. FOR UNITS TO BE EMBEDDED, COMPACT FILL IN FRONT OF UNITS AT THE SAME TIME FILL BEHIND UNITS IS COMPACTED.
9. DRAINAGE AGGREGATE SHALL BE INSTALLED DIRECTLY BEHIND THE WALL WITHIN 12" OF THE TOP OF THE WALL. DRAINAGE AGGREGATE SHALL NOT EXTEND BELOW FINAL GRADE IN FRONT OF WALL.
10. COMPACTION SHALL BE TO 95% OF MAXIMUM STANDARD PROCTOR DENSITY.(ASTM D-698)
11. COMPACTION TESTS SHALL BE TAKEN AS THE WALL IS INSTALLED. THE MINIMUM NUMBER OF TESTS SHALL BE DETERMINED BY THE SITE SOILS ENGINEER.
12. COMPACTION WITHIN 3 FT. OF WALL SHALL BE LIMITED TO HAND OPERATED EQUIPMENT.
13. CONTRACTOR SHALL DIRECT SURFACE RUNOFF TO AVOID DAMAGING WALL WHILE UNDER CONSTRUCTION.
14. ANY SURFACE DRAINAGE FEATURES, FINISH GRADING, PAVEMENT, OR TURF SHALL BE INSTALLED IMMEDIATELY AFTER WALL IS COMPLETED.
15. FOLLOW APPLICABLE PROVISIONS OF THE MANUFACTURER'S INSTALLATION INSTRUCTIONS AND WRITTEN SPECIFICATIONS.

MECHANICALLY STABILZED EARTH RETAINING WALL DETAIL
(N.T.S.)

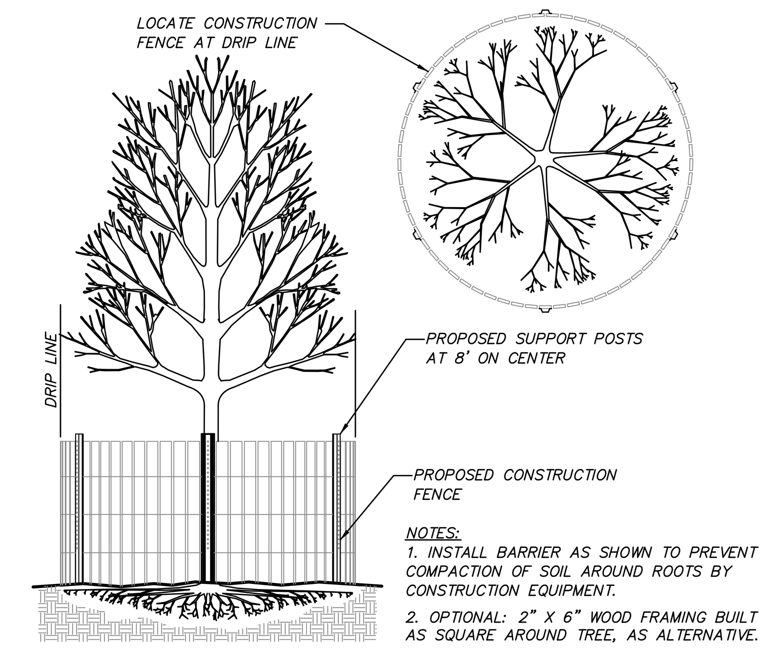

NOTES:
1. INSTALL BARRIER AS SHOWN TO PREVENT COMPACTION OF SOIL AROUND ROOTS BY CONSTRUCTION EQUIPMENT.
2. OPTIONAL: 2" X 6" WOOD FRAMING BUILT AS SQUARE AROUND TREE, AS ALTERNATIVE.

TREE PROTECTION DETAIL
(N.T.S.)

TREE PROTECTION NOTES:

1. Trees to be preserved in proximity to disturbance areas shall be marked in the field by the Landscape Architect prior to start of construction.
2. Install tree protection measures prior to start of site clearing & construction.
3. No construction equipment shall be parked and no earth or construction materials shall be stockpiled or stored under the canopy of trees to be preserved.
4. During tree removal operations associated with construction, do not damage adjacent trees to remain. Lower limbs and tree trunks, do not drop them.
5. Carefully tie back any tree branches that conflict with construction equipment.
6. Where trenching for utilities is required within a root zone, tunneling under and around roots shall be by hand digging. If roots 3" or larger are encountered immediately adjacent to the location of new construction and relocation is not practical, the roots shall be hand pruned under the supervision of a Certified Arborist or Landscape Architect to 6" back from the new construction limit. All exposed roots to receive appropriate treatment prior to backfilling.
7. If tree protection fencing to protect the root zone is not possible, six to eight inches of wood chip mulch and 3/4 inch plywood shall be placed over the entire affected root zone area to prevent soil compaction.
8. Any tree damaged during construction activities must be immediately repaired by a qualified arborist at no additional cost to the owner.

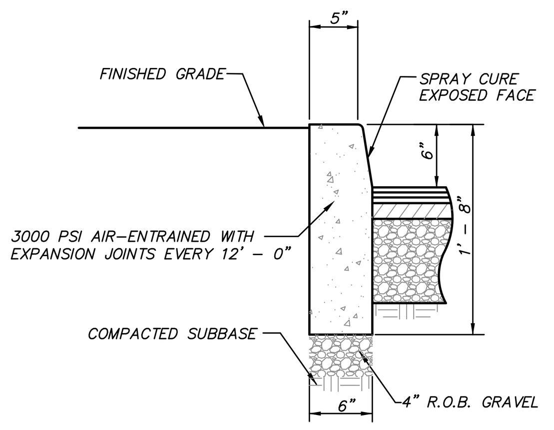

CONCRETE CURB DETAIL
(N.T.S.)

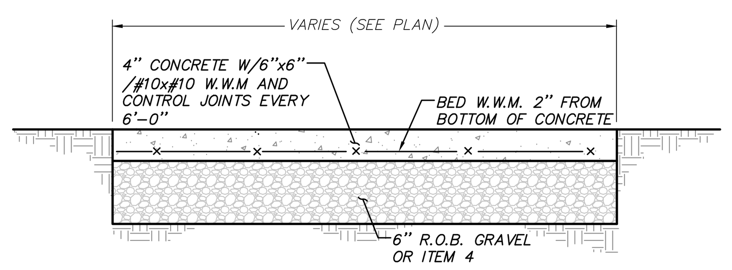

CONCRETE SIDEWALK DETAIL
(N.T.S.)

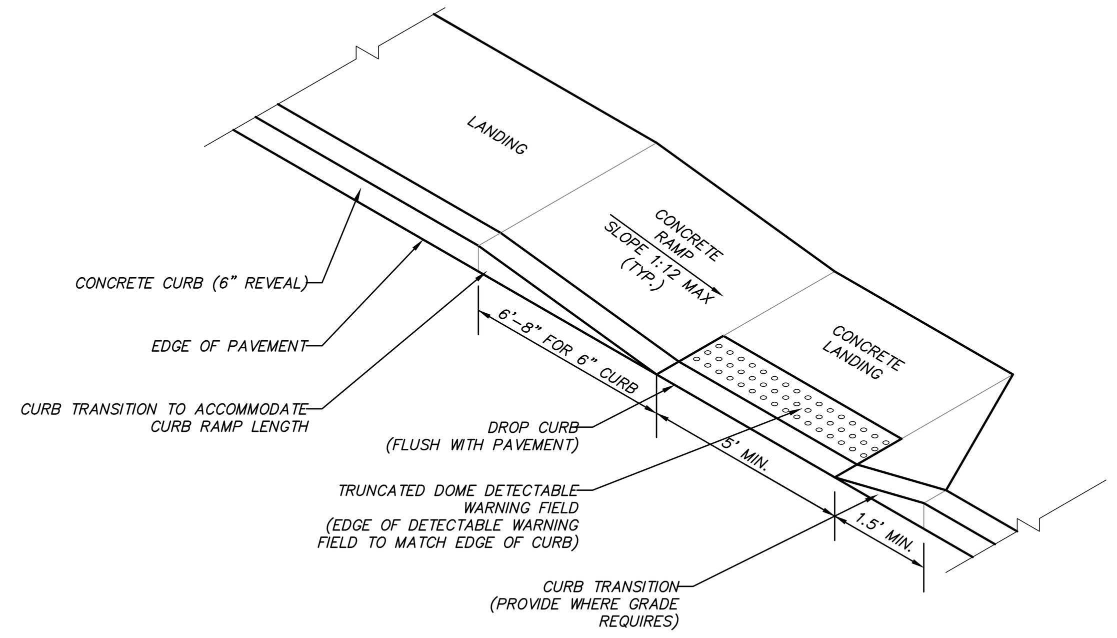

SIDEWALK CURB RAMP
(N.T.S.)

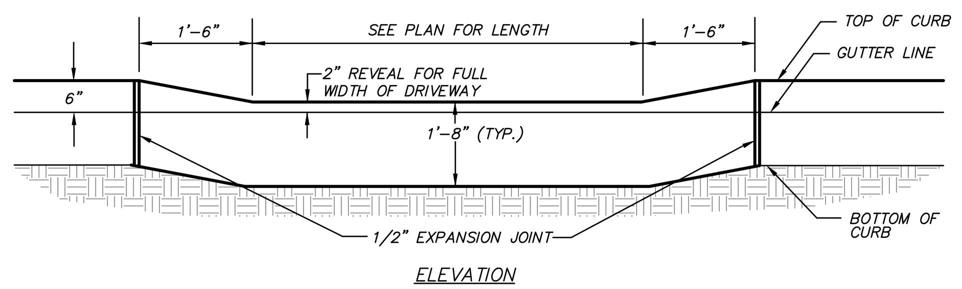

DROP CURB DETAIL
(N.T.S.)

GENERAL PLANTING NOTES:

1. All proposed planting beds to receive a 12" min. depth of topsoil. Soil amendments and fertilizer application rates shall be determined based on specific testing of topsoil material.
2. Any new soils added will be amended as required by results of soil testing and placed using a method that will not cause compaction.
3. No fertilizer shall be added in stormwater basin plantings. Nutrient requirements to be met by incorporation of acceptable organic matter.
4. All plant material to be nursery grown.
5. Plants shall conform with ANSI Z60.1 American Standard for Nursery Stock in all ways including dimensions.
6. Plant material shall be taken from healthy nursery stock.
7. All plants shall be grown under climate conditions similar to those in the locality of the project.
8. Plants shall be planted in all locations designed on the plan or as staked in the field by the Landscape Architect.
9. The location and layout of landscape plants shown on the site plan shall take precedence in any discrepancies between the quantities of plants shown on the plans and the quantity of plants in the Plant List.
10. Provide a 3" layer of shredded pine bark mulch (or as specified) over entire watering saucer at all tree pits or over entire planting bed. Do not place mulch within 3" of tree or shrub trunks.
11. All landscape plantings shall be maintained in a healthy condition at all times. Any dead or diseased plants shall immediately be replaced "in kind" by the contractor (during warranty period) or project owner.

GENERAL SITE SEEDING NOTES:

1. All proposed seeded areas to receive 4" min. depth of topsoil. Soil amendments and fertilizer application rates shall be determined based on specific testing of topsoil material.
2. Upon final grading and placement of topsoil and any required soil amendments, areas to receive permanent vegetation cover in combination with suitable mulch as follows:
   - select seed mixture per drawings and seeding notes.
   - fertilizer applied at the manufacturer's recommended rate using Lesco 10-0-18 (no phosphorous) fertilizer or equivalent.
   - mulch: salt hay or small grain straw applied at a rate of 90 lbs./1000 s.f. or 2 tons/acre, to be applied and anchored according to New York State Standards and Specifications for Erosion and Sediment Control, August 2005.
   - if the season prevents the establishment of a permanent vegetation cover, the disturbed areas will be mulched with straw or equivalent.
3. The seed mixes as specified on these drawings are as follows:
   A. Seed Mix for lawn areas and mow strip along roads at a rate of 100 lbs. per acre:
      Kentucky Bluegrass 20%
      Creeping Red Fescue 40%
      Perennial Ryegrass 20%
      Annual Ryegrass 20%
   B. Seed Mix for Wildflower Meadow areas and SSTS area as shown on the drawings at a rate of 15 lbs. per acre:
      Low-Growing Wildflower & Grass Mix (ERNMX-156) from Ernst Conservation Seeds of Meadville, PA.
   C. Seed Mix #2 for areas as shown on the drawings and slope areas 2:1 at a rate of 35 lbs. per acre:
      New England Erosion Control/Restoration Mix (for Dry Sites) from New England Wetland Plants, Inc. of Amherst, MA.

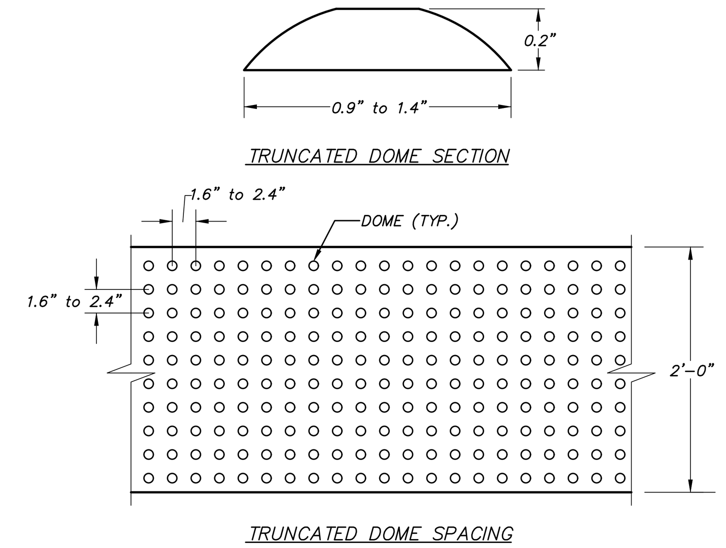

TRUNCATED DOME DETECTABLE WARNING FIELD NOTES:

1. The detectable warning field shall consist of raised truncated domes with a nominal diameter of 0.9 inches, a nominal height of 0.2 inches, and a nominal spacing of 2.35 inches on center in accordance with the Department of Justice-Code of Federal Regulations, 28 CFR Part 36, Chapter 4 "ADA Standards for Accessible Design", revised as of July 1, 1994.
2. The details provided are not drawn to scale. The quantity of domes depicted on the detectable warning field (the domes and the entire 24 inch level surface) is for illustration only.
3. The size of the detectable warning field shall be 24 inches in the direction of travel and shall extend the full width of the curb ramp or flush surface, exclusive of side flares.
4. Detectable warnings shall be located so that the edge of the warning field nearest to the roadway or street surface is 6 inches to 9 inches from the edge of the roadway/street, or from the front of the dropped curb, where a dropped curb continues across the bottom of the sidewalk curb ramp.
5. Domes shall be aligned on a square grid in the predominant direction of travel.
6. The detectable warning field shall be yellow.

TRUNCATED DOME DETAIL
(N.T.S.)

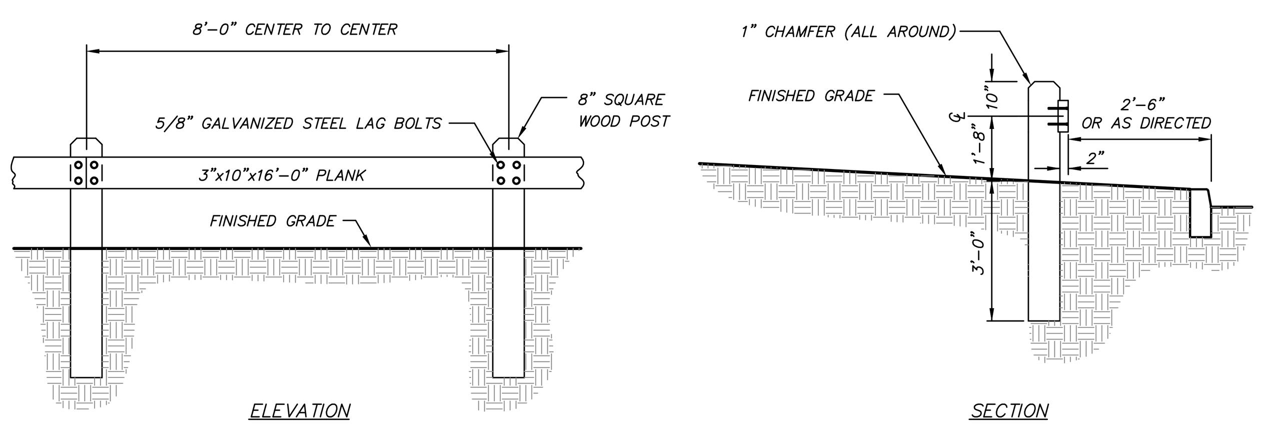

NOTES:
1. ALL WOOD TO BE SEASONED NO.1 DOUGLAS FIR, SOUTHERN PINE OR OTHER APPROVED STRUCTURAL LUMBER.
2. ALL WOOD TO BE TREATED WITH AN APPROVED WOOD PRESERVATIVE SUITABLE FOR INSTALLATION IN AND ADJACENT TO GROUND SURFACES.

WOOD GUIDE RAIL DETAIL
(N.T.S.)

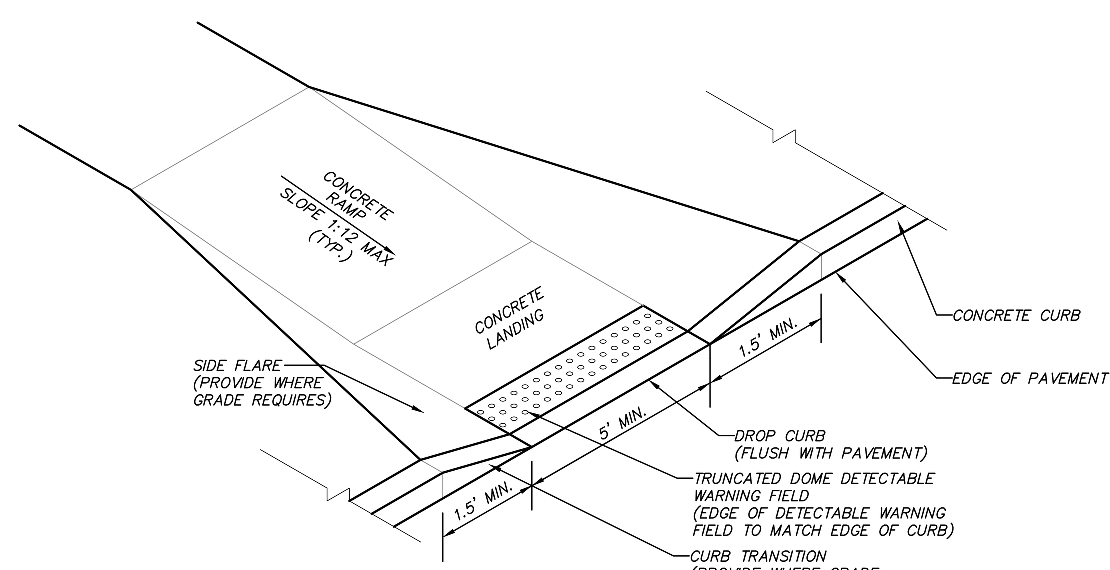

SIDEWALK CURB RAMP
(N.T.S.)

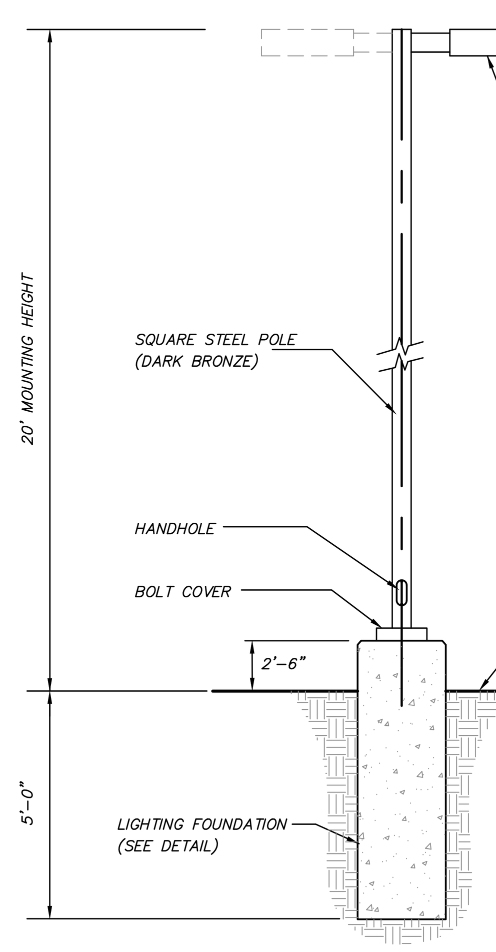

NOTES:
1. LIGHT SHALL BE DSX1 LED LUMINAIRE MANUFACTURED BY LITHONIA LIGHTING
2. IT SHALL BE THE CONTRACTOR'S RESPONSIBILITY TO CHECK AND VERIFY ALL ANCHOR BOLT DIMENSIONS (SIZE, BOLT CIRCLE, ETC.) WITH THE POLE MANUFACTURER PRIOR TO INSTALLATION OF THE FOUNDATIONS.
3. PROVIDE INSULATED GROUNDING BUSHING ON EXPOSED ENDS (IN BASE OF POLE) OF ALL GALVANIZED STEEL BENDS.
4. COLOR OF LUMINAIRE SHALL MATCH COLOR OF POLE.

SITE LIGHTING DETAIL
(N.T.S.)

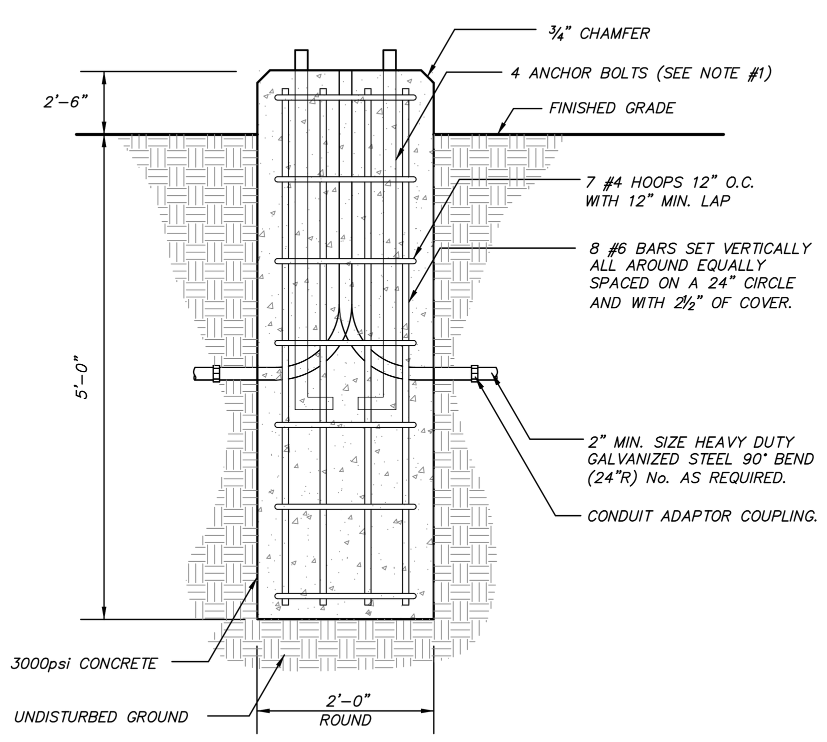

NOTES
1. IT SHALL BE THE CONTRACTOR'S RESPONSIBILITY TO CHECK AND VERIFY ALL ANCHOR BOLT DIMENSIONS (SIZE, BOLT CIRCLE, ETC.) WITH THE CONTRACTOR WHO WILL BE INSTALLING THE LIGHTING STANDARD PRIOR TO INSTALLATION OF THE FOUNDATIONS.
2. CHAMFER EXPOSED EDGES OF ALL FOUNDATIONS.
3. PROVIDE INSULATED GROUNDING BUSHING ON EXPOSED ENDS (IN BASE OF POLE) OF ALL GALVANIZED STEEL BENDS.

LIGHTING FOUNDATION DETAIL
(N.T.S.)

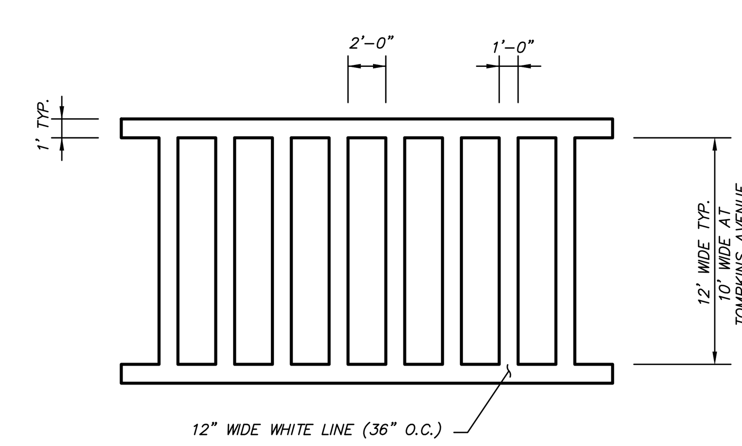

NOTE: INSTALLATION TO CONFORM WITH CURRENT NYSDOT STANDARDS AND SPECIFICATIONS

CROSSWALK MARKING DETAIL
(N.T.S.)

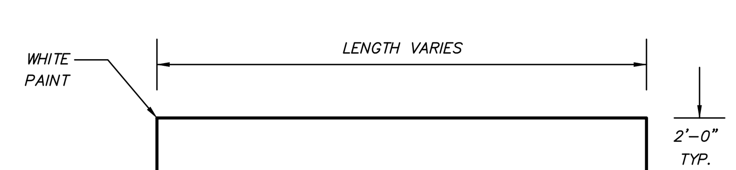

NOTE: INSTALLATION TO CONFORM WITH CURRENT NYSDOT STANDARDS AND SPECIFICATIONS

PAINTED STOP BAR DETAIL
(N.T.S.)

NOTE: SYMBOL MAY EITHER BE PAINTED IN WHITE ON BLUE FIELD OR IN BLUE ON BLANK FIELD WITH BLUE BORDER

PAINTED NYS ACCESSIBLE SYMBOL DETAIL
(N.T.S.)

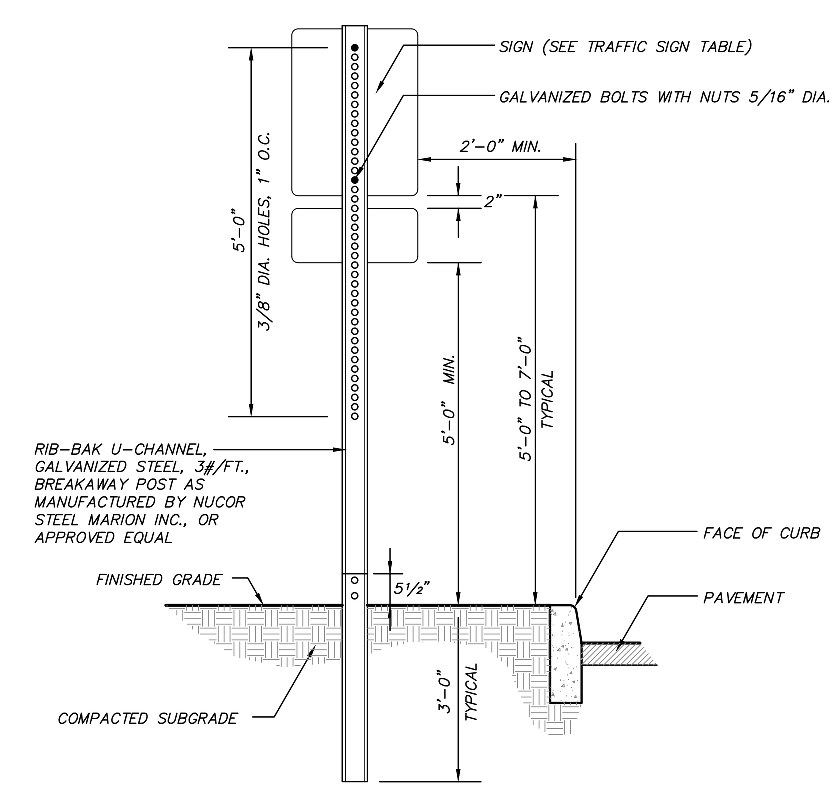

NOTE: FOR HANDICAP PARKING SIGNAGE, SIGNS SHALL BE INSTALLED AT A CLEAR HEIGHT OF BETWEEN 5'-0" AND 7'-0" ABOVE GRADE OF PARKING SPACE AND SUCH THAT SIGNS SHALL NOT BE OBSCURED BY A VEHICLE PARKED IN THE SPACE.

TRAFFIC SIGN DETAIL
(N.T.S.)

ALTERATION OF THIS DOCUMENT, UNLESS UNDER THE DIRECTION OF A LICENSED PROFESSIONAL ENGINEER, IS A VIOLATION OF SECTION 7209 OF ARTICLE 145 OF THE EDUCATION LAW.

NO.	DATE	REVISION	BY

INSITE ENGINEERING, SURVEYING & LANDSCAPE ARCHITECTURE, P.C.
3 Garrett Place
Carmel, NY 10512
(845) 225-9690
(845) 225-9717 fax
www.insite-eng.com

PROJECT:
RESTAURANT DEPOT
U.S. ROUTE 6, TOWN OF SOUTHEAST, PUTNAM COUNTY, NEW YORK

DRAWING:
REPRESENTATIVE DETAILS

STATE OF NEW YORK · JEFFREY J. CONTELMO · 61931 · LICENSED PROFESSIONAL ENGINEER

PROJECT NUMBER	03157.101	PROJECT MANAGER	J.J.C.
DATE	12-23-19	DRAWN BY	J.F.R.
SCALE	AS NOTED	CHECKED BY	J.L.L.

DRAWING NO. D-1
SHEET 9 / 12

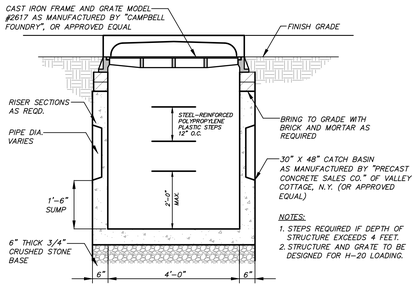

NOTES:
1. STEPS REQUIRED IF DEPTH OF STRUCTURE EXCEEDS 4 FEET.
2. STRUCTURE AND GRATE TO BE DESIGNED FOR H-20 LOADING.

CATCH BASIN DETAIL
(N.T.S.)

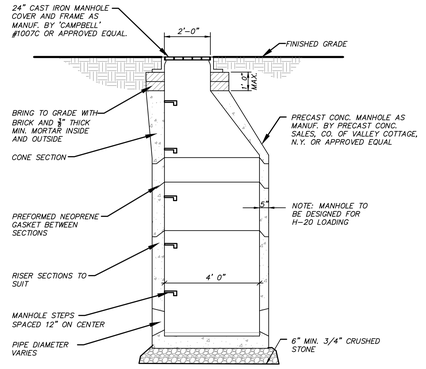

DRAINAGE MANHOLE DETAIL
(N.T.S.)

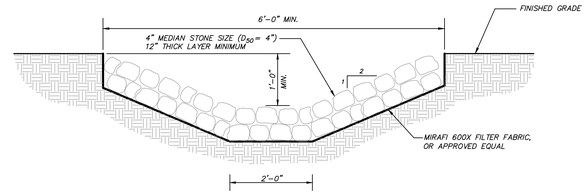

RIP RAP SWALE DETAIL
(N.T.S.)

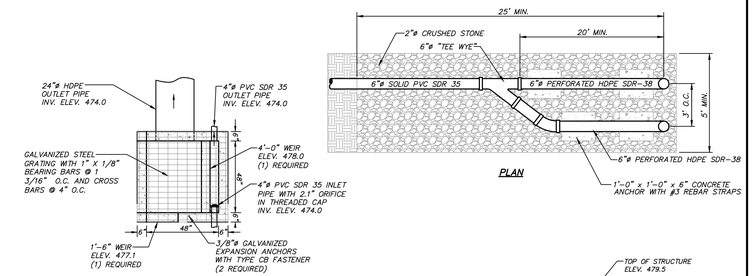

PLAN

PLAN

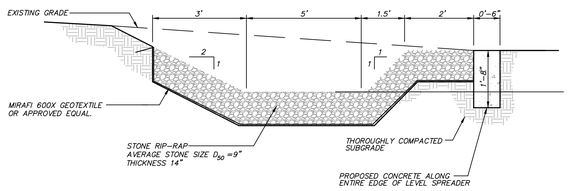

LEVEL SPREADER DETAIL
(N.T.S.)

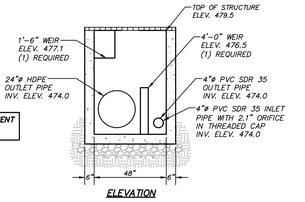

ELEVATION

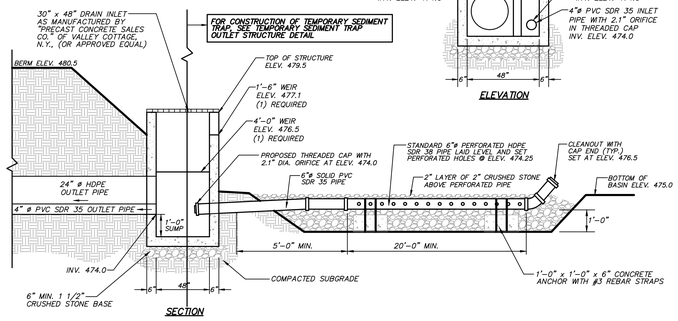

SECTION

EXTENDED DETENTION DRY PRETREATMENT BASIN 2.0 EDB OUTLET STRUCTURE (OS 2.0 EDB) DETAIL
(N.T.S.)

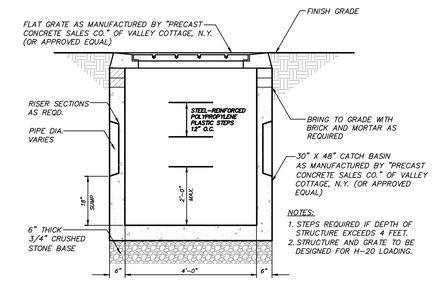

NOTES:
1. STEPS REQUIRED IF DEPTH OF STRUCTURE EXCEEDS 4 FEET.
2. STRUCTURE AND GRATE TO BE DESIGNED FOR H-20 LOADING.

DRAIN INLET DETAIL
(N.T.S.)

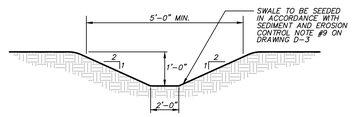

GRASS SWALE TO BE LINED WITH CURLEX I AS MANUFACTURED BY "AMERICAN EXCELSIOR COMPANY" OR APPROVED EQUAL.

GRASS SWALE DETAIL
(N.T.S.)

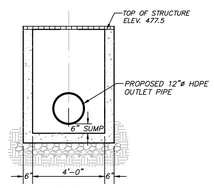

SECTION A-A

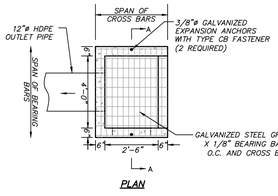

PLAN

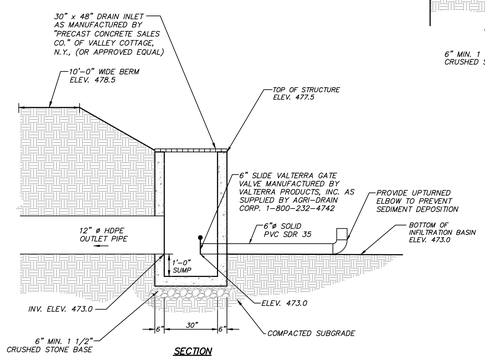

SECTION

INFILTRATION BASIN 2.0 IB OUTLET STRUCTURE DETAIL (NYSDEC DESIGN I-2)
(N.T.S.)

EXTENDED DETENTION DRY PRETREATMENT BASIN & INFILTRATION BASIN OUTLET NOTES

1. THE BASINS ARE PROPOSED TO BE UTILIZED AS TEMPORARY SEDIMENT BASINS DURING CONSTRUCTION.
2. AFTER THE CONTRIBUTING AREAS TO THE BASINS HAVE BEEN PERMANENTLY STABILIZED, THE FOLLOWING SHALL BE ACCOMPLISHED:

FOR EXTENDED DETENTION DRY PRETREATMENT BASINS 2.1EDB AND MICROPOOL EXTENDED DETENTION POND 1.1P.
- A. CLEAN BASIN AND OUTLET STRUCTURE AND REMOVE 6"ø PERFORATED VERTICAL RISER PIPE, CRUSHED STONE AND FILTER FABRIC.
- B. ADD THREADED CAP WITH ORIFICE AT DISCHARGE END OF 6"ø SOLID PVC SDR 35 PIPE'S PER DETAIL.
- C. REPLACE THE PERFORATED PIPE AND CRUSHED STONE. DO NOT REPLACE FILTER FABRIC.
- D. ESTABLISH THE FINAL VEGETATION IN THE BASIN IN ACCORDANCE WITH THE TYPICAL DRY STORMWATER / INFILTRATION BASIN PLANTING DETAIL.

FOR INFILTRATION BASINS 2.2IB
- A. INFILTRATION BASIN CONSTRUCTED IN ITS FINAL CONDITION PER THE DETAILS SHOWN HEREON DURING INITIAL PHASES OF CONSTRUCTION AND STABILIZED.
- B. ALL FLOW SHALL BE DIVERTED AWAY FROM THE BASIN UNTIL ALL CONTRIBUTING AREAS HAVE BEEN STABILIZED IN ACCORDANCE WITH THE EROSION AND SEDIMENT CONTROL NOTES.
- C. UPON COMPLETE STABILIZATION OF ALL CONTRIBUTING AREAS AND CONVERSION OF THE TEMPORARY SEDIMENT TRAP TO THE PERMANENT EXTENDED DETENTION DRY PRETREATMENT STORMWATER BASIN. DIRECT ALL TO INFILTRATION BASIN.

3. FOLLOWS: * WHEN INITIALLY USED AS THE TEMPORARY SEDIMENT BASIN DEWATERING DEVICE THE RISER SHALL BE WRAPPED WITH TYPAR 3201 GEOTEXTILE OR APPROVED EQUAL AND SURROUNDED WITH 2"ø STONE. THE TOP OF THE RISER SHALL BE SET AT THE SAME ELEVATION AS THE WEIRS AS SHOWN IN THE STORMWATER BASIN OUTLET STRUCTURE DETAILS.

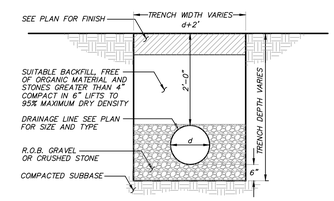

DRAINAGE LINE TRENCH DETAIL
(N.T.S.)

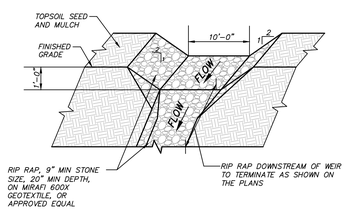

EMERGENCY OVERFLOW SPILLWAY DETAIL
(N.T.S.)

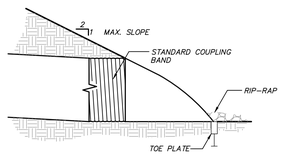

SECTION

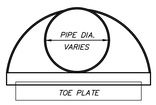

ELEVATION

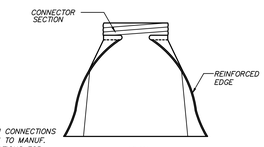

NOTE:
END SECTION CONNECTIONS TO CONFORM TO MANUF. RECOMMENDATIONS FOR VARIOUS PIPE SIZES

PLAN

END SECTION DETAIL
(N.T.S.)

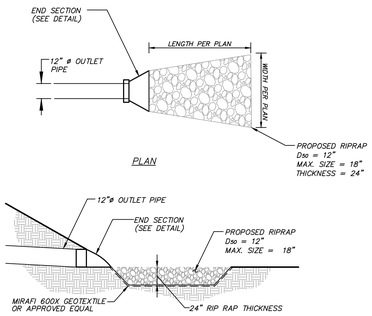

PLAN

SECTION

VELOCITY DISSIPATOR DETAIL
(N.T.S.)

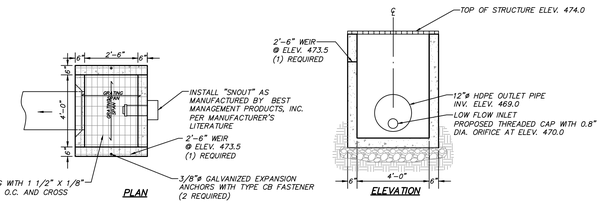

PLAN

ELEVATION

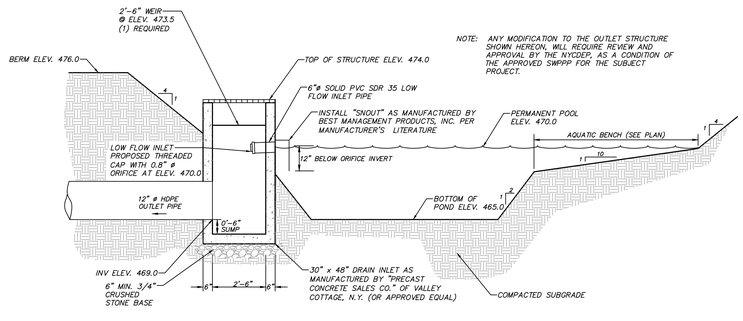

NOTE: ANY MODIFICATION TO THE OUTLET STRUCTURE SHOWN HEREON, WILL REQUIRE REVIEW AND APPROVAL BY THE NYCDEP, AS A CONDITION OF THE APPROVED SWPPP FOR THE SUBJECT PROJECT.

SECTION

MICROPOOL EXTENDED DETENTION POND (NYSDEC DESIGN P-1) PERMANENT OUTLET STRUCTURE (OS 1.1) DETAIL
(N.T.S.)

FOR ADDITIONAL BASIN CONSTRUCTION DETAILS, SEE THE PERMANENT STORMWATER BASIN OUTLET STRUCTURE DETAIL FOR EXTENDED DETENTION DRY PRETREATMENT BASIN 2.0 EDB AND MICROPOOL EXTENDED DETENTION POND PERMANENT OUTLET STRUCTURE (OS 1.1).

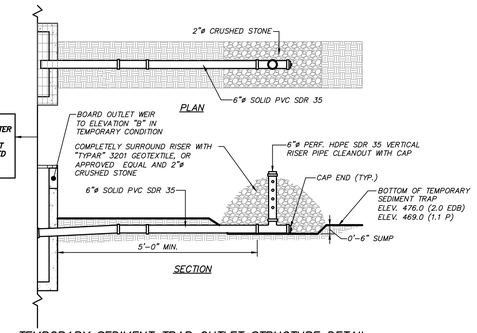

PLAN

SECTION

TEMPORARY SEDIMENT TRAP OUTLET STRUCTURE DETAIL
(N.T.S.)

NO.	DATE	REVISION	BY

INSITE
ENGINEERING, SURVEYING & LANDSCAPE ARCHITECTURE, P.C.
3 Garrett Place
Carmel, NY 10512
(845) 225-9690
(845) 225-9717 fax
www.insite-eng.com

PROJECT:
RESTAURANT DEPOT
U.S. ROUTE 6, TOWN OF SOUTHEAST, PUTNAM COUNTY, NEW YORK

DRAWING:
REPRESENTATIVE DETAILS

STATE OF NEW YORK · JEFFREY J. CONTENTO · 91931 · LICENSED PROFESSIONAL ENGINEER

PROJECT NUMBER	03157.101	PROJECT MANAGER	J.J.C.	DRAWING NO.	SHEET 10 / 12
DATE	12-23-19	DRAWN BY	J.F.R.	D-2	
SCALE	AS NOTED	CHECKED BY	J.L.L.		

ALTERATION OF THIS DOCUMENT, UNLESS UNDER THE DIRECTION OF A LICENSED PROFESSIONAL ENGINEER, IS A VIOLATION OF SECTION 7209 OF ARTICLE 145 OF THE EDUCATION LAW.

Z:\E\03157\05-DB-Restaurant Depot\109.0-1-4.dwg, 12/23/2019 9:44:16 AM, jfraser, 1:1

EROSION AND SEDIMENT CONTROL NOTES:

1. The Erosion and Sediment Control Plan is only to be referred to for the installation of erosion and sediment control measures. For all other construction related activities, including, but not limited to, grading and utilities, refer to the appropriate drawings.
2. The owner's field representative (O.F.R.) will be responsible for the implementation and maintenance of erosion and sediment control measures on this site prior to and during construction.
3. All construction activities involving the removal or disposition of soil are to be provided with appropriate protective measures to minimize erosion and contain sediment disposition within. Minimum soil erosion and sediment control measures shall be implemented as shown on the plans and shall be installed in accordance with "New York Standards and Specifications For Erosion and Sediment Control," latest edition.
4. Wherever feasible, natural vegetation should be retained and protected. Disturbance shall be minimized in the areas required to perform construction. No more than 5 acres of unprotected soil shall be exposed at any one time.
5. When land is exposed during development, the exposure shall be kept to the shortest practical period of time, but in no case more than 7 days after the construction activity in that portion of the site has ceased. Disturbance shall be minimized in the areas required to perform construction.
6. All construction vehicles shall be kept clear of the watercourses and wetland control areas outside the areas of proposed development. Silt fence and orange construction fence shall be installed in the areas where the grading is in close proximity of the watercourses or wetland control areas.
7. The stabilized construction entrances, silt fence, and orange construction fence shall be installed as shown on the plans prior to beginning any clearing, grubbing or earthwork.
8. All topsoil to be stripped from the area being developed shall be stockpiled and immediately seeded with Lolium perenne aristatum or Lolium perenne multiflorum for temporary stabilization. Lolium perenne aristatum shall be used for winter seeding and Lolium perenne multiflorum shall be used for spring and summer seeding.
9. Any graded areas not subject to further disturbance or construction traffic shall, within 7 days of final grading, receive permanent vegetation cover in combination with a suitable mulch. All seeded areas to receive a minimum 4" topsoil (from stockpile area) and be seeded and mulched as follows:
   - Seed mixtures as noted in the Planting Notes on Drawing SP-1 are to be planted between March 21 and May 20, or between August 15 and October 15 or as directed by project representative:
   - Mulch: Salt hay or small grain straw applied at a rate of 90 lbs./1000 S.F. or 2 tons/acre, to be applied and anchored according to "New York Standards and Specification For Erosion and Sediment Control," latest edition.
10. Grass seed mixes may be applied by either mechanical or hydroseeding methods. Seeding shall be performed in accordance with the current edition of the "NYSDOT Standard Specification, Construction and Materials, Section 610-3.02, Method No. 1". Hydroseeding shall be performed using materials and methods as approved by the site engineer.
11. Cut or fill slopes equal to or steeper than 3:1 shall be stabilized immediately after grading with Curlex I Single Net Erosion Control Blanket, or approved equal.
12. Paved roadways shall be kept clean at all times.
13. The site shall at all times be graded and maintained such that all stormwater runoff is diverted to soil erosion and sediment control facilities.
14. All storm drainage outlets shall be stabilized, as required, before the discharge points become operational.
15. Stormwater from disturbed areas must be passed through erosion control barriers before discharge beyond disturbed areas or discharged into other drainage systems.
16. Erosion and sediment control measures shall be inspected and maintained on a daily basis by the O.F.R. to insure that channels, temporary and permanent ditches and pipes are clear of debris, that embankments and berms have not been breached and that all straw bales and silt fences are intact. Any failure of erosion and sediment control measures shall be immediately repaired by the contractor and inspected for approval by the O.F.R. and/or site engineer.
17. Dust shall be controlled by sprinkling or other approved methods as necessary, or as directed by the O.F.R.
18. Cut and fills shall not endanger adjoining property, nor divert water onto the property of others.
19. All fills shall be placed and compacted in 6" lifts to provide stability of material and to prevent settlement.
20. The O.F.R. shall inspect downstream conditions for evidence of sedimentation on a weekly basis and after rainstorms.
21. As warranted by field conditions, special additional erosion and sediment control measures, as specified by the site engineer, the Wetlands Inspector, the Town Engineer and/or NYCDEP shall be installed by the contractor.
22. Erosion and sediment control measures shall remain in place until all disturbed areas are suitably stabilized.
23. After completion of the site improvements, the owner will assume responsibility for maintenance of the roads, parking lots, drainage systems and stormwater facilities. Each spring the paved areas shall be cleaned to remove the winter accumulation of traction sand. After this is completed all drain inlet and catch basin sumps should be cleaned. All pipes should be checked for debris and blockage and cleaned as required. During the cleaning process, the drain inlets, catch basins and pipes should be inspected for structural integrity and overall condition. Repairs and/or replacements should be made as required.
24. Inspection of the stormwater basins should be performed every 6 months and after large storm events. These inspections should, at a minimum, check the outlet pipes for blockage and the general overall integrity of the basin and appurtenances.
25. Maintain basin vegetation including removal of trees and replacement of vegetation that should die. Remove any litter which accumulates as necessary. Typically, the accumulated silt will be required to be removed every 10 to 20 years. Any accumulated silt shall be removed from the stormwater basins once the site has been stabilized.
26. Refer to the Stormwater Pollution Prevention Plan for additional details regarding long-term maintenance of the storm drainage facilities.

REQUIRED EROSION CONTROL SWPPP CONTENTS:

Pursuant to the NYSDEC "SPDES General Permit for Stormwater Discharges from Construction Activity" (GP-0-15-002), all Stormwater Pollution Prevention Plans (SWPPP) shall include erosion and sediment control practices designed in conformance with the most current version of the technical standard, "New York Standards and Specifications for Erosion and Sediment Control." Where erosion and sediment control practices are not designed in conformance with this technical standard, the owner or operator must demonstrate equivalence to the technical standard. The following list of required SWPPP components is provided in accordance with Part III.B.1a-l of General Permit GP-0-15-002:

a. Background Information: The subject project consists of the construction of a parking lot and associated stormwater practices.

b. Site map / construction drawing: This plan serves to satisfy this SWPPP requirement for planimetric design and details.

c. Description of the soils present at the site: Onsite soils located within the proposed limits of disturbance consist of Paxton Fine Sandy Loam (PnC) and Charlton Loam (ChB), as identified on the Soil Conservation Service Web Soil Survey. This soil type belongs to the Hydrologic Soil Group "B" and "C".

d. Construction phasing plan / sequence of operations: The project will not be phased. A Construction Sequence and Erosion and Sediment Control Maintenance Schedule has been provided. The Erosion and Sediment Control Notes contained hereon outline a general sequence of operations for the proposed project. In general all erosion and sediment control facilities shall be installed prior to commencement with land disturbing activities, and areas of disturbance shall be limited to the shortest period of time as practicable. The total limits of disturbance is approximately 8 acres, therefore the subject project has been phased, refer to Drawing SP-4.

e. Description of erosion and sediment control practices: This plan, and details / notes shown hereon serve to satisfy this SWPPP requirement.

f. Temporary and permanent soil stabilization plan: The Erosion and Sediment Control Notes and Details provided hereon identify temporary and permanent stabilization measures to be employed with respect to specific elements of the project, and at the various stages of development.

g. Site map / construction drawing: This plan serves to satisfy this SWPPP requirement for erosion control notes and details.

h. The dimensions, material specifications, installation details, and operation and maintenance requirements for all erosion and sediment control practices: The Details, Erosion and Sediment Control Notes and Erosion and Sediment Control Maintenance Schedule serve to satisfy this SWPPP requirement.

i. An inspection schedule: Inspections are to be performed bi-weekly and by a qualified professional as required by the General Permit GP-0-15-002. In addition, the Owner's Field Representative (OFR) shall perform additional inspections as cited in the Erosion and Sediment Control Notes.

j. A description of pollution prevention measures that will be used to control litter, construction chemicals and construction debris: In general, all construction litter / debris shall be collected and removed from the site. The general contractor shall supply either waste barrels or dumpster for proper waste disposal. Any construction chemicals utilized during construction shall either be removed from site daily by the contractor or stored in a structurally sound and weatherproof building. No hazardous waste shall be disposed of onsite, and shall ultimately be disposed of in accordance with all federal, state and local regulations. Material Safety Data Sheets (MSDS), material inventory, and emergency contact numbers shall be maintained by the general contractor for all construction chemicals utilized onsite. Finally, temporary sanitary facilities (portable toilets) shall be provided onsite during the entire length of construction, and inspected weekly for evidence of leaking holding tanks.

k. A description and location of any stormwater discharges associated with industrial activity other than construction at the site: There are no known industrial stormwater discharges present or proposed at the site.

l. Identification of any elements of the design that are not in conformance with the technical standard, "New York Standards and Specifications for Erosion and Sediment Control." All proposed elements of this SWPPP have been designed in accordance with the "New York Standards and Specifications for Erosion and Sediment Control."

REQUIRED POST-CONSTRUCTION STORMWATER MANAGEMENT PRACTICE COMPONENTS:

1. Pursuant to the NYSDEC "SPDES General Permit for Stormwater Discharges from Construction Activity" (GP-0-15-002), all construction projects needing post-construction stormwater management practices shall prepare a SWPPP that also includes practices designed in conformance with the most current version of the technical standard, New York State Stormwater Management Design Manual ("Design Manual"). Where post-construction stormwater management practices are not designed in conformance with this technical standard, the owner or operator must demonstrate equivalence to the technical standard. The following list of SWPPP components is provided in accordance with Part III.B.2a-g and III.B.3:

   a. Identification of all post-construction stormwater management practices to be constructed as part of the project: The project plan set, and details/notes shown hereon serve to satisfy this SWPPP requirement.

   b. A site map/construction drawing(s) showing the specific location and size of each post-construction stormwater management practice: This plan, and details/notes shown hereon serve to satisfy this SWPPP requirement.

   c. The dimensions, material specifications and installation details for each post-construction stormwater management practice: This plan, and details/notes shown hereon serve to satisfy this SWPPP requirement.

   d. Identification of any elements of the design that are not in conformance with the Design Manual. Include the reason for the deviation or alternative design and provide information which demonstrates that the deviation or alternative design is equivalent to the technical standards; All post-construction stormwater management practices are in conformance with the Design Manual.

   e. A hydrologic and hydraulic analysis for all structural components of the stormwater management control system: The required analysis is provided in the report titled Preliminary Stormwater Pollution Prevention Plan for W.B. New York.

   f. A detailed summary (including calculations) of the sizing criteria that was used to design all post-construction stormwater management practices. At a minimum, the summary shall address the required design criteria from the applicable chapter of the Design Manual; including the identification of and justification for any deviations from the Design Manual, and identification of any design criteria that are not required based on the redevelopment criteria or waiver criteria included in the Design Manual; The stormwater practices are sized in accordance with the Design Manual, specifically chapters 4, 6, and 10. The stormwater facilities have been designed to provide water quality volume treatment (treatment of the 1 year 24-hour design storm per the Enhanced Phosphorus Removal Standards). Channel Protection Volume is not required as the extended detention orifice would be less than 3" to provide 24-hour center of mass detention of the 1 year 24-hour design storm. A down stream analysis conducted in accordance with the Design Manual has revealed that the Overbank Flood Control and Extreme Flood Control is not required. Calculations are provided in report entitled Preliminary Stormwater Pollution Prevention Plan for W.B. New York. All practices are designed in accordance with the Design Manual.

   g. An operations and maintenance plan that includes inspection and maintenance schedules and actions to ensure continuous and effective operation of each post-construction stormwater management practice. The plan shall identify the entity that will be responsible for the long term operation and maintenance of each practice. The Permanent Stormwater Facilities Maintenance Schedule provided on these plans serves to satisfy this requirement.

2. Enhanced Phosphorus Removal Standards - Beginning on September 30, 2008, all construction projects identified in Table 2 of Appendix B that are located in the watersheds identified in Appendix C shall prepare a SWPPP that includes post-construction stormwater management practices designed in conformance with the Enhanced Phosphorus Removal Standards included in the most current version of the technical standard, New York Stormwater Management Design Manual. At a minimum, the post-construction stormwater management practice component of the SWPPP shall include items 2.a - 2.g above. The permanent stormwater practices for this project have been sized according to chapter 10 of the Design Manual Enhanced Phosphorus Removal Standards. Please see 2.a - 2.g above.

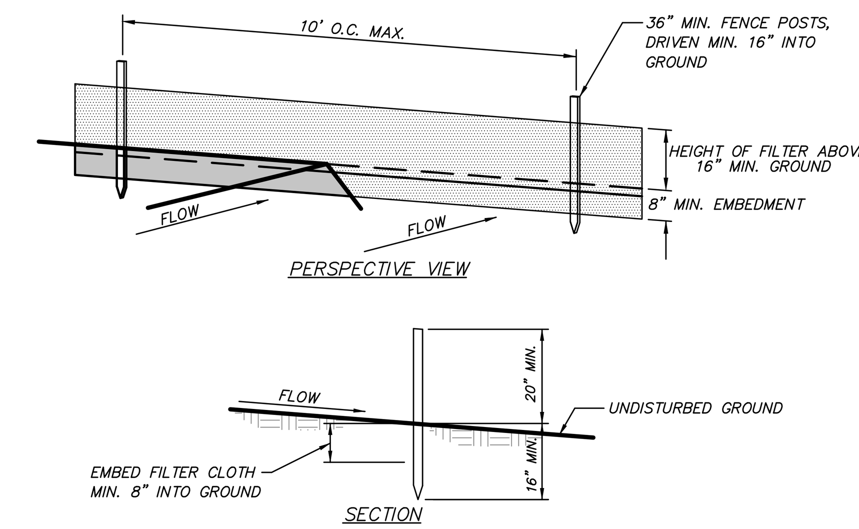

CONSTRUCTION NOTES FOR FABRICATED SILT FENCE

1. FILTER CLOTH TO BE FASTENED SECURELY TO POSTS AT TOP AND MID SECTION.
2. WHEN TWO SECTIONS OF FILTER CLOTH ADJOIN EACH OTHER THEY SHALL BE OVERLAPPED BY SIX INCHES AND FOLDED.
3. MAINTENANCE SHALL BE PERFORMED AS NEEDED AND MATERIAL REMOVED WHEN "BULGES" DEVELOP IN THE SILT FENCE.

POSTS: STEEL EITHER T OR U TYPE OR 2" HARDWOOD

FILTER CLOTH: FILTER X, MIRAFI 100X, STABILINKA T140N, OR APPROVED EQUAL

PREFABRICATED UNIT: GEOFAB, ENVIROFENCE, OR APPROVED EQUAL

SILT FENCE DETAIL
(N.T.S.)

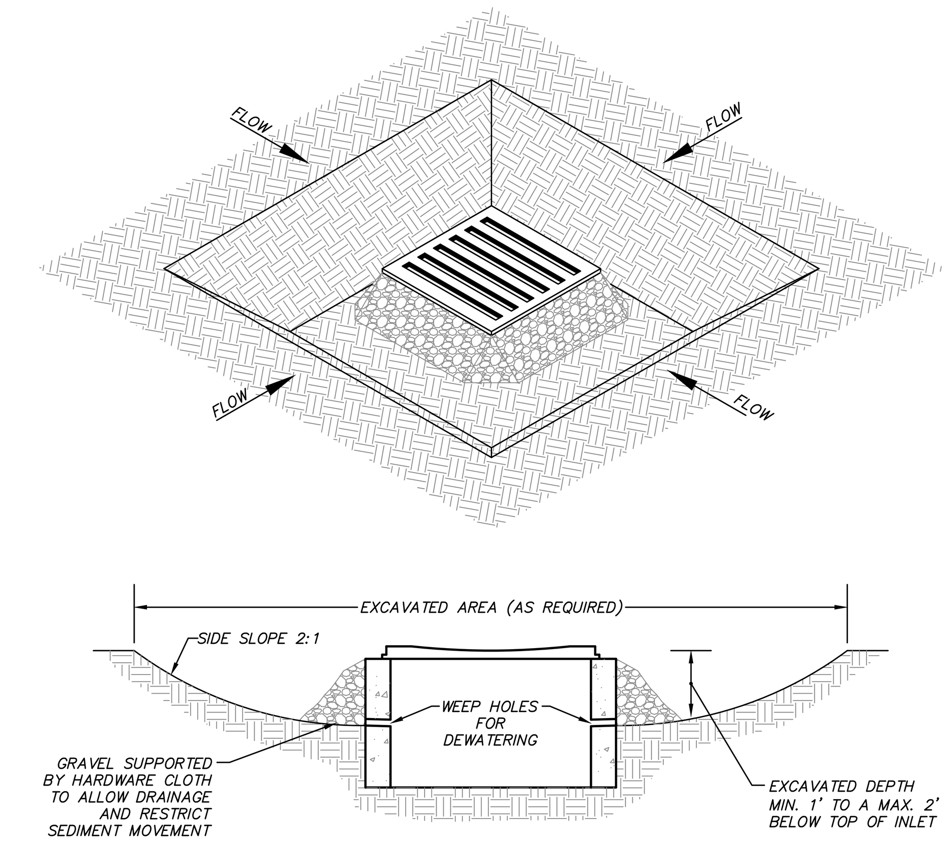

1. CLEAR THE AREA OF ALL DEBRIS THAT WILL HINDER EXCAVATION
2. GRADE APPROACH TO THE INLET UNIFORMLY AROUND THE BASIN
3. WEEP HOLES SHALL BE PROTECTED BY GRAVEL
4. UPON STABILIZATION OF CONTRIBUTING DRAINAGE AREA, SEAL WEEP HOLES, FILL EXCAVATION WITH STABLE SOIL TO FINAL GRADE, COMPACT IT PROPERLY, AND STABILIZE WITH PERMANENT SEEDING
5. MAXIMUM DRAINAGE AREA = 1 ACRE

EXCAVATED DROP INLET PROTECTION DETAIL
(N.T.S.)

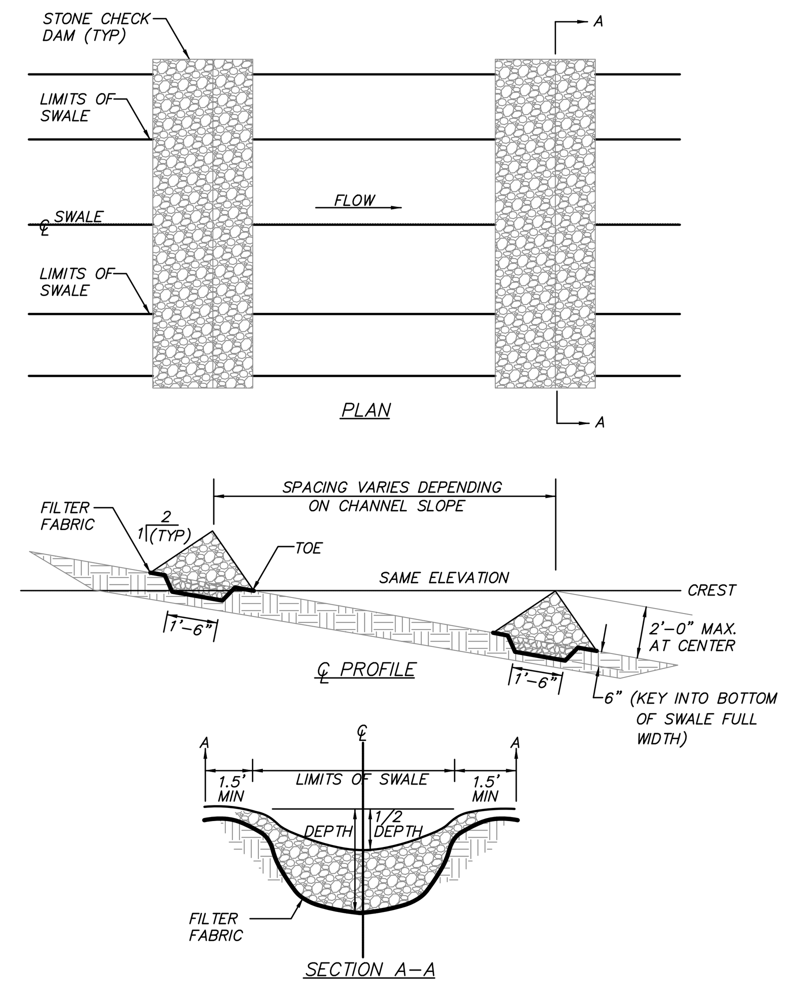

NOTES:

1. STONE SHALL BE PLACED ON A FILTER FABRIC FOUNDATION.
2. SET SPACING OF CHECK DAMS SO THAT THE ELEVATIONS OF THE CREST OF THE DOWNSTREAM DAM IS AT THE SAME ELEVATION OF THE TOE OF THE UPSTREAM DAM.
3. EXTEND THE STONE A MINIMUM OF 1.5 FEET BEYOND THE DITCH BANKS TO PREVENT CUTTING AROUND THE DAM.
4. PROTECT THE CHANNEL DOWNSTREAM OF THE LOWEST CHECK DAM FROM SCOUR AND EROSION WITH STONE LINER AS APPROPRIATE.
5. ENSURE THAT CHANNEL APPURTENANCES SUCH AS CULVERT ENTRANCES BELOW CHECK DAMS ARE NOT SUBJECT TO DAMAGE OR BLOCKAGE FROM DISPLACED STONE.

STONE CHECK DAM DETAIL
(N.T.S.)

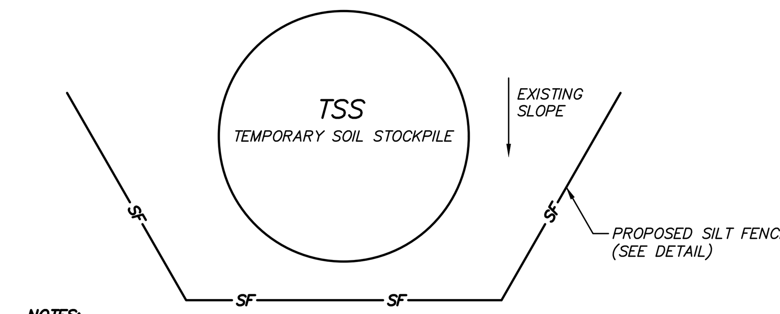

NOTES:

1. AREA CHOSEN FOR STOCKPILE LOCATION SHALL BE DRY AND STABLE.
2. MAXIMUM SLOPE OF STOCKPILE SHALL BE 2:1.
3. UPON COMPLETION OF SOIL STOCKPILING, EACH PILE SHALL BE IMMEDIATELY SEEDED WITH K31 PERENNIAL TALL FESCUE.
4. ALL STOCKPILES SHALL BE PROTECTED WITH SILT FENCING INSTALLED ON THE DOWNGRADIENT SIDE.

TEMPORARY SOIL STOCKPILE DETAIL
(N.T.S.)

PERMANENT STORMWATER FACILITIES MAINTENANCE SCHEDULE

PRACTICE/FACILITY	MONTHLY	AFTER MAJOR STORM EVENTS	BI-ANNUALLY	YEARLY	EVERY 5 to 10 YEARS
GRASS & RIP RAP SWALES	Ensure contributing areas clean of debris, no evidence of erosion, & mowing performed.	Inspect for erosion, soil permeability & evidence of flow going around structures.	Inspect & clean Mow & remove debris & litter. Revegetate as needed.	Inspect & clean accumulated sediment.	Inspect for & remove accumulated sediment
INFILTRATION BASINS AND EXTENDED DETENTION BASINS	Inspect first few months after construction for eroding soils & slumpage & repair immediately	Inspect orifices, inlets & outlets for clogging, eroding soils on the basin berm & embankments, & sources of erosion; & stabilize and/or repair immediately.	Mow berms and exterior embankments Remove debris & litter from basins & outlet structures. Remove Sediment if accumulated greater than an 1"	–	Inspect for & remove accumulated sediment
SUBSURFACE STORMWATER COLLECTION SYSTEMS	–	–	Inspect & clean	Inspect, clean, repair and/or replace structures. Remove debris.	–
STORMWATER BASIN	Inspect first few months after construction for eroding soils & slumpage & repair immediately	Inspect orifices, inlets & outlets for clogging, eroding soils on the basin berm & embankments, & sources of erosion; & stabilize and/or repair immediately.	Mow berm and exterior embankments Remove debris & litter from basin & outlet structures	–	Inspect for & remove accumulated sediment
CATCH BASIN SUMPS		–	Inspect for damage to frame and grate, and pipe inlets/outlets. Clean accumulated sediment in sump.	–	–

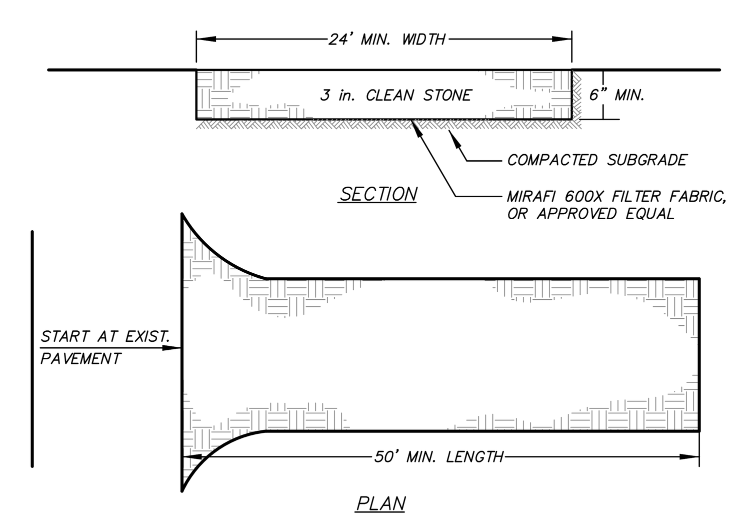

INSTALLATION NOTES

1. STONE SIZE - USE 3" STONE
2. LENGTH - AS REQUIRED, BUT NOT LESS THAN 50 FEET (EXCEPT ON A SINGLE RESIDENCE LOT WHERE A 30 FOOT MINIMUM LENGTH WOULD APPLY.)
3. THICKNESS - NOT LESS THAN SIX (6) INCHES.
4. WIDTH - 10 FOOT MINIMUM, BUT NOT LESS THAN THE FULL WIDTH AT POINTS WHERE INGRESS OR EGRESS OCCUR.
5. FILTER CLOTH - WILL BE PLACED OVER THE ENTIRE AREA PRIOR TO PLACING OF STONE. FILTER CLOTH WILL NOT BE REQUIRED ON A SINGLE FAMILY RESIDENCE LOT.
6. SURFACE WATER - ALL SURFACE WATER FLOWING OR DIVERTED TOWARD CONSTRUCTION ENTRANCES SHALL BE PIPED ACROSS THE ENTRANCE. IF PIPING IS IMPRACTICAL, A MOUNTABLE BERM WITH 5:1 SLOPES WILL BE PERMITTED.
7. MAINTENANCE - THE ENTRANCE SHALL BE MAINTAINED IN A CONDITION WHICH WILL PREVENT TRACKING OR FLOWING OF SEDIMENT ONTO PUBLIC RIGHT OF WAY THIS MAY REQUIRE PERIODIC TOP DRESSING WITH ADDITIONAL STONE AS CONDITIONS DEMAND AND REPAIR AND/OR CLEANOUT OF ANY MEASURES USED TO TRAP SEDIMENT. ALL SEDIMENT SPILLED, DROPPED, WASHED OR TRACKED ONTO PUBLIC RIGHT OF WAY MUST BE REMOVED IMMEDIATELY.
8. WASHING - WHEELS SHALL BE CLEANED TO REMOVE SEDIMENT PRIOR TO ENTRANCE ONTO PUBLIC RIGHT OF WAY. WHEN WASHING IS REQUIRED, IT SHALL BE DONE ON AN AREA STABILIZED WITH STONE AND WHICH DRAINS INTO AN APPROVED SEDIMENT TRAPPING DEVICE.
9. PERIODIC INSPECTION AND NEEDED MAINTENANCE SHALL BE PROVIDED AFTER EACH RAIN.

STABILIZED CONSTRUCTION ENTRANCE DETAIL
(N.T.S.)

ALTERATION OF THIS DOCUMENT, UNLESS UNDER THE DIRECTION OF A LICENSED PROFESSIONAL ENGINEER, IS A VIOLATION OF SECTION 7209 OF ARTICLE 145 OF THE EDUCATION LAW.

NO.	DATE	REVISION	BY

INSITE ENGINEERING, SURVEYING & LANDSCAPE ARCHITECTURE, P.C.
3 Garrett Place
Carmel, NY 10512
(845) 225-9690
(845) 225-9717 fax
www.insite-eng.com

PROJECT:
RESTAURANT DEPOT
U.S. ROUTE 6, TOWN OF SOUTHEAST, PUTNAM COUNTY, NEW YORK

DRAWING:
REPRESENTATIVE DETAILS

STATE OF NEW YORK · JEFFREY J. CONTELMO · 61931 · LICENSED PROFESSIONAL ENGINEER

PROJECT NUMBER	03157.101	PROJECT MANAGER	J.J.C.
DATE	12-23-19	DRAWN BY	J.F.R.
SCALE	AS NOTED	CHECKED BY	J.L.L.

DRAWING NO. D-3

SHEET 11 / 12

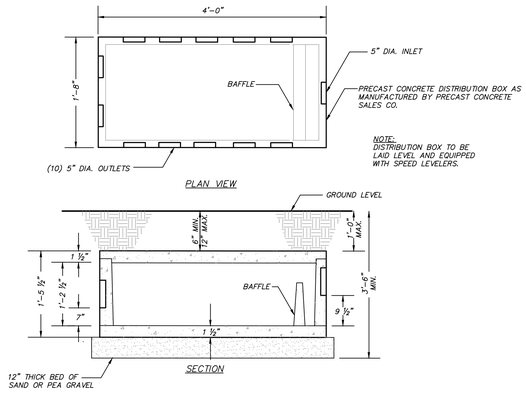

12 WAY DISTRIBUTION BOX DETAIL

(N.T.S.)

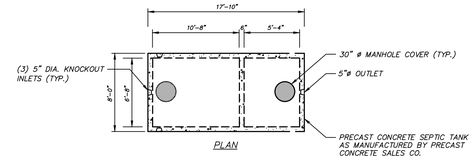

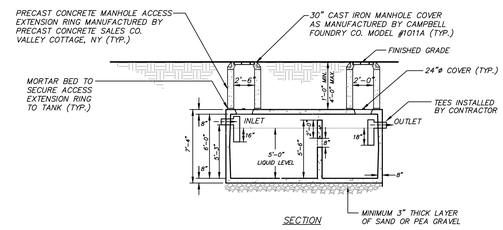

4000 GALLON SEPTIC TANK DETAIL

(TO BE DESIGNED FOR H-20 LOADING)
(N.T.S.)

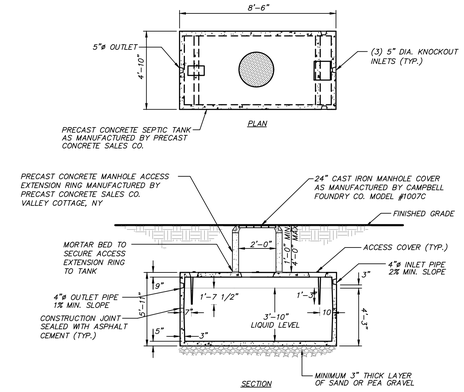

1,000 GALLON OVERFLOW TANK DETAIL

(TO BE H-20 LOADING)
(N.T.S.)

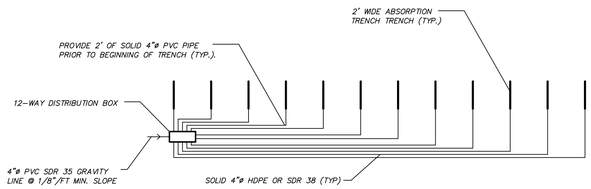

SSTS DISTRIBUTION SCHEMATIC

(N.T.S.)

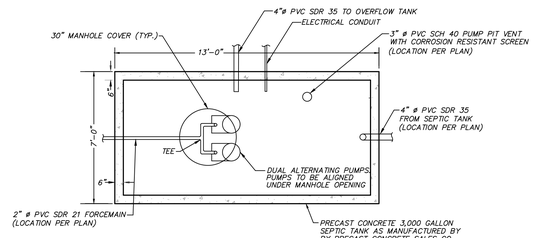

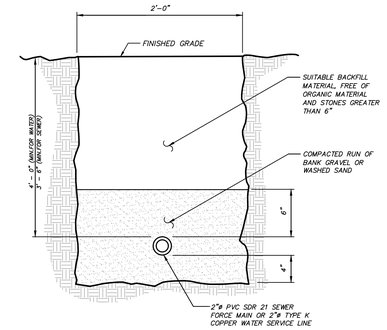

SEWER FORCE MAIN TRENCH OR WATER SERVICE LINE TRENCH DETAIL

(N.T.S.)

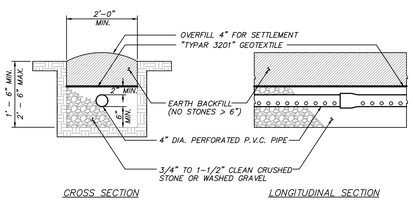

NOTES:
1. PROVIDE 2' OF SOLID PIPE AT THE BEGINNING OF EVERY TRENCH.
2. PROVIDE END CAPS AT THE END OF EACH ABSORPTION TRENCH.
3. THE SLOPE OF THE PERFORATED PIPES SHALL BE BETWEEN A MINIMUM OF 1/32"/FT AND A MAXIMUM OF 1/16"/FT, UNLESS THE TRENCHES ARE DOSED BY PUMPING OR BY A DOSING TANK. DOSED TRENCHES SHALL BE LEVEL.

ABSORPTION TRENCH DETAIL

(N.T.S.)

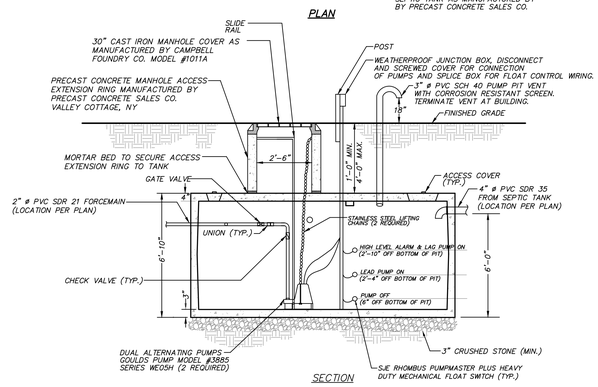

3,000 GALLON DUAL ALTERNATING PUMP PIT DETAIL

(TO BE H-20 LOADING)
(N.T.S.)

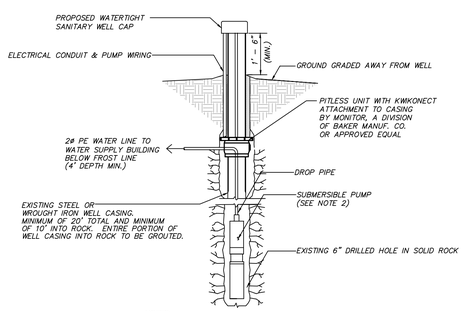

NOTES:
1. PROVIDE SANITARY SEALS WHERE NECESSARY.
2. FINAL PUMP SELECTION SHALL BE MADE BY ENGINEER, PRIOR TO CONSTRUCTION.
3. MINIMUM WELL YIELD SOUGHT IS XXX GPM

PITLESS UNIT WELL DETAIL

(N.T.S.)

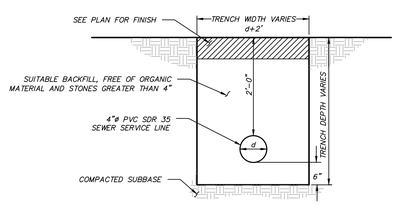

SEWER SERVICE LINE TRENCH DETAIL

(N.T.S.)

PUMP PIT NOTES:

1. PUMP CONTROL PANEL AND AUDIO/VISUAL ALARM SHALL BE LOCATED INSIDE THE BUILDING.
2. ALL ELECTRICAL WORK AND MATERIAL TO COMPLY WITH THE NATIONAL ELECTRICAL CODE REQUIREMENTS FOR CLASS I GROUP D, DIVISION 1 LOCATIONS.
3. ALL MODEL NUMBERS SPECIFIED ARE FROM GOULDS PUMPS, INC., SENECA FALLS, NEW YORK. CAN ONLY BE SUBSTITUTED WITH APPROVAL FROM DESIGN ENGINEER.
4. AN ELECTRICAL UNDERWRITER'S CERTIFICATE FOR THE PUMP CHAMBER COMPONENTS MUST BE PROVIDED TO THE COUNTY DEPARTMENT OF HEALTH AS A PART OF THE CONSTRUCTION COMPLIANCE SUBMISSION PACKAGE.
5. EACH PUMP AND ALARM TO BE CONNECTED TO SEPARATE CIRCUITS.
6. ABSORPTION TRENCH VOLUME = 1,760 LF X $\frac{\pi\left(\frac{4}{12}\right)^2}{4}$ X $\frac{7.48\ GAL}{CF}$ =1,149 GALLONS
   - PROPOSED DOSE VOLUME = 945 GALLONS (82% OF PIPE VOLUME)
   - VOLUME PER INCH OF DRAW = 6.0 FT X 12 FT X 1 IN X $\frac{1\ FT}{12\ IN}$ X $\frac{7.48\ GAL}{CF}$ = 45 GAL/IN
   - VOLUME OF FORCE MAIN = 265 LF X $\frac{\pi\left(\frac{2}{12}\right)^2}{4}$ X $\frac{7.48\ GAL}{CF}$ = 43 GAL
   - DOSE DRAW = $\frac{43\ GAL + 945\ GAL}{45\ GAL/IN}$ = 22 IN
7. EMERGENCY STORAGE ABOVE HIGH LEVEL ALARM = 35 IN X 45 GAL/IN = 1,575 GALLONS
   1,800 GALLONS OF DESIGN FLOW - 1,575 GALLONS = 225 GALLONS REQUIRED IN OVERFLOW TANK
8. A 1,000 GALLON OVERFLOW TANK WILL BE USED TO STORE THE REMAINING EMERGENCY STORAGE REQUIRED ABOVE THE HIGH LEVEL ALARM.
9. PUMPS, GATE VALVES AND UNIONS MUST BE LOCATED UNDER MANHOLE OPENING AND BE ACCESSIBLE WITHOUT HAVING TO ENTER THE PUMP PIT.
10. REMOVE ALL BAFFLES FROM THE TANK.
11. THE FLOAT SETTINGS NOTED ARE FOR A PUMP PIT WITH THE SPECIFIC DIMENSIONS SHOWN HEREON. CONTACT THE DESIGN ENGINEER FOR THE PROPER FLOAT SETTINGS IF A PUMP PIT WITH DIFFERENT DIMENSIONS IS USED.

ALTERATION OF THIS DOCUMENT, UNLESS UNDER THE DIRECTION OF A LICENSED PROFESSIONAL ENGINEER, IS A VIOLATION OF SECTION 7209 OF ARTICLE 145 OF THE EDUCATION LAW.

NO.	DATE	REVISION	BY

INSITE
ENGINEERING, SURVEYING & LANDSCAPE ARCHITECTURE, P.C.
3 Garrett Place
Carmel, NY 10512
(845) 225-9690
(845) 225-9717 fax
www.insite-eng.com

PROJECT:
RESTAURANT DEPOT
U.S. ROUTE 6, TOWN OF SOUTHEAST, PUTNAM COUNTY, NEW YORK

DRAWING:
REPRESENTATIVE SSTS DETAILS

STATE OF NEW YORK · ROBERT J. COMMANDO · 071951 · LICENSED PROFESSIONAL ENGINEER

PROJECT NUMBER	03157.101	PROJECT MANAGER	J.J.C.
DATE	12-23-19	DRAWN BY	J.F.R.
SCALE	AS NOTED	CHECKED BY	J.L.L.

DRAWING NO. D-4
SHEET 12 / 12

Z:\E\03157\SE-CB\Restaurant Depot\09-5-14.dwg 12/23/2019 9:44:46 AM jmoss 1:1